emBRICK

emBRICK® - EPC

Embedded Patch-board Controller

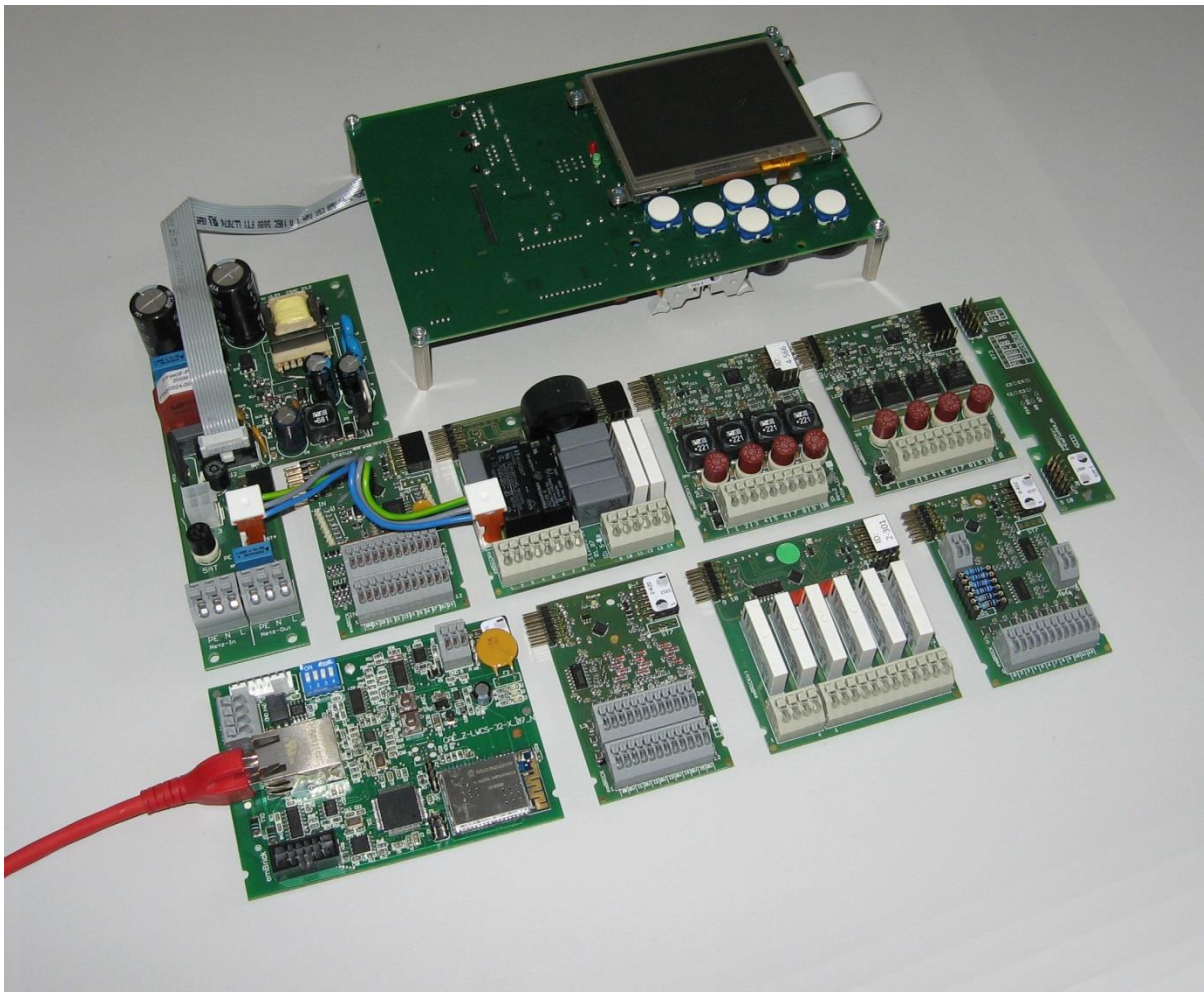

Product Catalogue

Rev. 022

emBRICK GmbH
Alfred-Nobel-Straße 2
55411 Bingen am Rhein, Germany
www.embrick.de

support@embrick.de
Hotline: +49 (0) 7154 80 83 – 15

emBRICK GmbH, hereinafter also referred to as emBRICK, reserves the right to make changes without further notice to any products herein. emBRICK makes no warranty, representation or guarantee regarding the suitability of its products for any particular purpose, nor does emBRICK assume any liability arising out of the application or use of any product or circuit, and specifically disclaims any and all liability, including without limitation consequential or incidental damages. “Typical” parameters which may be provided in emBRICK data sheets and/or specifications can and do vary in different applications and actual performance may vary over time. All operating parameters, including “Typicals” must be validated for each customer application by customer’s technical experts. emBRICK does not convey any license under its patent rights nor the rights of others.

copyright © emBRICK GmbH 2021. All rights reserved.
Reproduction, in part or whole, without the prior written consent of emBRICK GmbH is prohibited.

Content

1. THE EMBRICK® MISSION 7
1.1 Typical Applications 7
1.2 Basic Characteristics 8
1.3 Available Hardware Products 8
1.4 Available Host Platforms, Connectivity 8
1.5 Available Programming Platforms 8

2. INTRODUCTION 9
2.1 About this Manual 9
2.2 References / Manual Overview 9
2.3 Glossary 9

3. PRODUCT OVERVIEW 10
3.1 Master components 10
3.2 Slave Components 13
3.3 Passive Components 17
3.4 Packages 20

4. GLOBAL INFORMATION 21
4.1 Component Identification 21
4.2 Product Descriptor 22
4.3 Standards and Approvals 23
4.4 Common technical data 23
4.5 Ground adaption/connection 24
4.6 Integration and Protection 24
4.7 Notes for Usage 25
4.8 Data Location and Access 26

1 CAE MASTER COMPONENTS 27
1.1 General information 27
1.2 Compact Masters 28
1.2.1 CBB_CPU-uniMIND-M3 (Cortex-M3) 28
1.2.2 CBB_CPU-uniCORE-M3 (Cortex-M3) 31
1.2.3 CBB_CPU-uniMIND-M4 (Cortex-M4) 33
1.2.4 CBB_CPU-uniMIND-M7 (Cortex-M7) 34
1.2.5 CBB_CPU-uniBRAIN-A8-0# 37
1.2.6 CBB_CPU-Idren-A8-0# 40
1.3 Coupler for Remote-Master 43
1.3.1 CAE_Z-CouplingBrick-0# 44
1.3.2 CAE_Z-PatBridgeMX-1# 49
1.3.3 CAE_Z-UniBridgeMX-1#-RB 53
1.3.4 CAE_Z-AirBridgeMX-1# 57
1.3.5 Coupler to KNX 57
1.3.6 Coupler to EtherCAT 57
1.3.7 Coupler to Profibus/Profinet 57
1.4 Adaption Masters 58
1.4.1 CAE_Z-RaspberryBrick-## (for Raspberry Pi) 59

1.4.2 CAE_Z-RaspberryBrick-1#-RB (for Raspberry Pi 3 / 3 B+) ... 63
1.4.3 CAE_Z-BeagleboneBrick-0# (for Beaglebone Black) ... 68
1.4.4 CAE_Z-BeagleboneBrick-1#-RB (for Beaglebone Black) ... 71
1.4.5 CAE_Z-ArduinoBrick-0# (for Arduino XXX) ... 74
1.5 Cloud based Master ... 75
1.5.1 Z-LWCS-web@ctrl1-## (from home2net) ... 75

5. CAE SLAVE COMPONENTS ... 76
5.1 General information ... 76
5.1.1 Status LED ... 76
1.6 CAE G Bricks (General Purpose) ... 77
1.6.1 G-8Di8Do-01 ... 78
1.6.2 G-8Rel8Di-01-RB ... 82
1.6.3 G-4Do-01-RB ... 86
1.6.4 G-4Di4Do-01 ... 89
1.6.5 G-2RelNo4RelCo-01 ... 93
1.6.6 G-3RelNo-0# ... 97
1.6.7 G-6Ai2Tmp-0# ... 101
1.6.8 G-4Ai4Tmp-0# ... 105
1.6.9 G-5Ai3Imp-0# ... 110
1.6.10 G-5Ai3Dcyc-0# ... 117
1.6.11 G-2Mi2Ao-0# ... 124
1.6.12 G-RelMiAo-01 ... 130
1.6.13 G-MotDC4Ai-0# ... 137
1.6.14 G-StpDiDoRes-0# ... 137
1.6.15 G-2Stp2Di2Do2A-01 ... 138
1.6.17 G-6Rel6Di2Ai2Ri-0#-RB ... 142
1.6.18 G-6Ai2Ao2Ai4Tmp-01-RB ... 146
1.6.19 C-Eng3Rel2Ai2Ri4Dio-01-RB ... 151
1.6.20 G-2ComSens-#1 ... 159
1.6.21 SubBricks for ComSens ... 208
1.6.22 G-2Ai2Ao-0#-RB ... 225
1.6.23 G-2Ai2AoPDS-0#-RB ... 230
5.2 CAE S Bricks (Safety) ... 233
5.3 CAE B Bricks (Building Automation) ... 234
5.3.1 B-8Temp-0# ... 235
5.3.2 B-6Moti2LDR-01 ... 239
5.3.3 B-4Dim230T-01 ... 243
5.3.4 B-4DimLedU-01 ... 247
5.3.5 B-4DimLedI-0# ... 252
5.3.6 B-3U3I_400-01 ... 257
5.3.7 B-3U4I-400-##-RB ... 258
5.4 CAE P Bricks (Process Control) ... 275
5.4.1 P-112Rel#-01 ... 276
5.4.2 P-2Rel6Di-01 ... 280
5.4.3 P-2Rel4Di2Ai-0# ... 284
5.4.4 P-6Rel5DiPow-01 ... 288
5.4.5 P-5Rel3DiPoPow-0# ... 294
5.4.6 P-LfTmpAoDAioImp-0# ... 300
5.4.7 P-LfTmp2Pi2AiAo ... 309
5.4.8 P-2LfTmp ... 317

5.4.9 P-2CcvCav4Do2Imp-01 ... 321
5.4.10 P-2ECell-01 ... 329
5.4.11 P-pHTmpAoDAioImp-0# ... 333
5.4.12 P-RdxTmpAoDAioImp-0# ... 339
5.4.13 P-IsoTmpAoDAioImp-0# ... 340
5.4.14 P-UlcTmpAoDAioImp-0# ... 340
5.5 CAE T Bricks (Testing) ... 342
5.5.1 T-4Di4Do-01 ... 343
5.5.2 T-4Ai4Ao-0# ... 350
5.6 CAE M Bricks (Medical / Care) ... 357
5.7 CAE E Bricks (Education / Entertainment) ... 358
5.7.1 E-BreakoutBoard-01 ... 359

6. PASSIVE COMPONENTS ... 365
6.1 General Information ... 365
6.2 Carrier Systems ... 366
6.3 Enclosures ... 367
6.3.1 Wall mounting ... 367
6.3.2 Top-Hat Rail ... 369
6.4 Adapters, Connectors ... 370
6.4.1 Adapter ... 370
6.4.2 Connectors ... 385
6.4.3 LCD-Interfaces ... 389
6.5 Power Supplies ... 390
6.5.1 X-Inject230-20SM-01 ... 390
6.5.2 X-Inject230-30SM-01 ... 392
6.5.3 X-Inject230-60SM-01 ... 394
6.6 Actor Power Supplies ... 394
6.6.1 CAS_Pow3p25A-B400-## ... 394
6.6.2 CAS_Sock1p16A-IP65-## ... 394
6.7 Power Control ... 394
6.7.1 CAP_Drive3p25A-## ... 394
6.8 Sensors ... 394
6.9 Display ... 395
6.9.1 CAD_Edt-70C-01 ... 395
6.9.2 CAD_EdtBot-70C-01 ... 395
6.10 Tools ... 395
6.10.1 CAE_MountCarrier-01 ... 395

7. CC PACKAGES ... 396
7.1 General Information ... 396
7.2 Controller, compact ... 397
7.2.1 CCB_MIND1-####-28# ... 397
7.2.2 CCB_MIND1-####-35# ... 398
7.2.3 CCB_BRAIN1-####-70R ... 399
7.2.4 CCC_IMPACT1-B250-35T ... 400
7.3 Starterkits ... 401
7.3.1 TES_eB-STK-M1 ... 401
7.3.2 CouplingBrick Starterkit-1 ... 402
7.3.3 RaspberryBrick Starterkit-1 ... 403
7.3.4 BeagleboneBrick Staterkit-1 ... 404

8. APPENDIX 405
8.1 Savety Instructions 405
8.2 CE Declaration 406
8.3 RoHS Declaration 407

1. The emBRICK® Mission

The mission of *emBRICK®* is an **open** and **free** I/O system to ...

> build **compact** and **industrial suited** electronic **control systems**
> by **assembling** small **existing/own** embedded **boards** (**bricks**) ...

... via a SPI-based **local interface** and optional **remote buses** (LAN, WLAN, CAN, RSxxx, ...).
We call this new class of controllers simple **EPC** (= **E**mbedded **P**atch-board **C**ontroller).

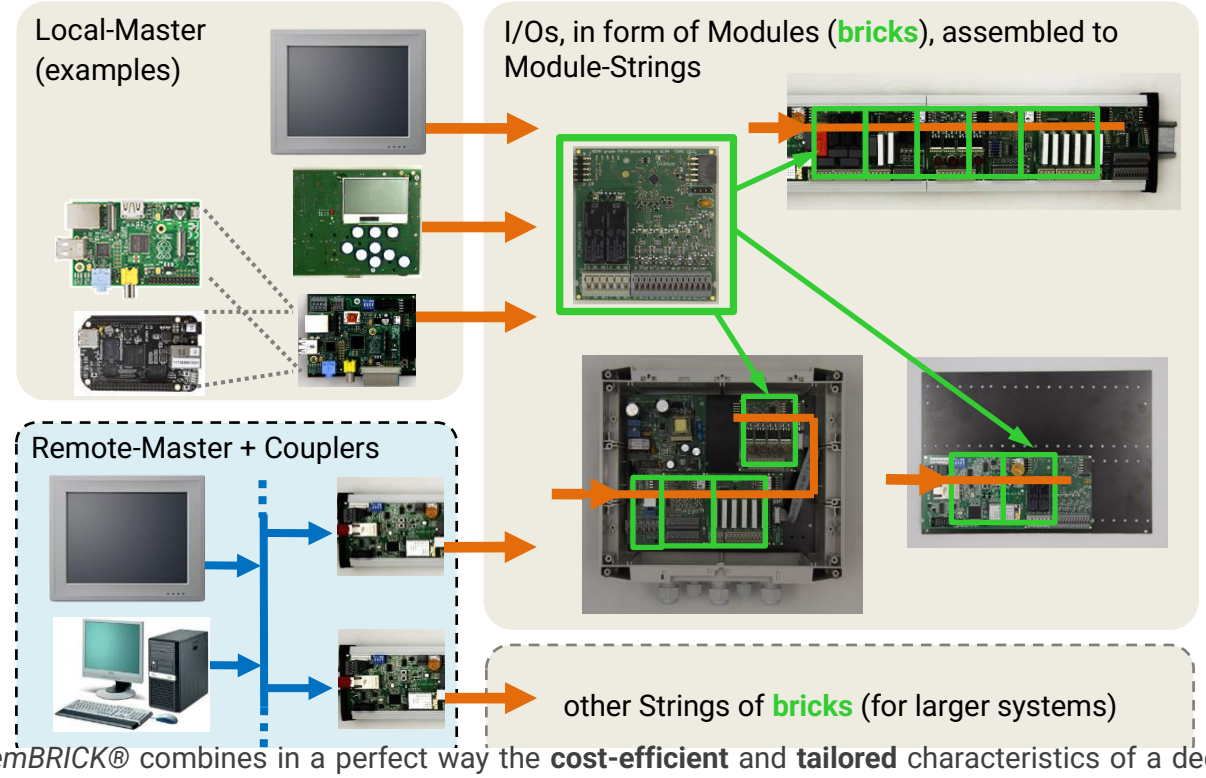

emBRICK® combines in a perfect way the **cost-efficient** and **tailored** characteristics of a dedicated embedded system with the **ready to use** and **flexibility** of a PLC system.

To ensure a high acceptance, it is an open and free system. I.e. besides buying existing devices, everyone can develop his own components to realize easily his individually tailored, cost-efficient and industrial-suited measure and control system.

1.1 Typical Applications

- Small, medium and large size **measure and control systems**
- **Sectoral purpose**, with direct sensor/actor interface
- **Autonomous single box** control solutions i.e. with HMI and communication interfaces
- **Rapid hardware prototyping** system for control and measuring applications
- **PLC replacement** (i.e. with a Soft-PLC, IPC or an embedded controller)
- Medium and large size **distributed IO-systems** (i.e. building automation)
- Physical front-end for **IoT** (Internet of Things)

For more details see *Product_Catalogue* and *Application_Manual*.

1.2 Basic Characteristics

- **free** - also for commercial use in own appliances (for pure EMS with a license fee)
- **open** - supplying reference schematics, protocol source code, samples and starter kits
- **adaptable** to all systems, using common, low cost standard µCs/components
- **half ... third price** compared to common control systems (complete system view)
- scalable local and remote topologies, **1 ... >1000 I/Os**, up to **1ms update**, deterministic
- **low own power** consumption, average 50mW/slave module in operation (outputs inactive)
- global and sector specific modules for **direct connection** of various **sensors and actors**
- **easy installation**, no configuration necessary, simple plug modules together and use
- works with / programmable by **various established**, well known **platforms / languages**

1.3 Available Hardware Products

Beside own developments, currently the following components are available from IMACS:

Slave-Modules ..... > 50 different modules for the sectors: General Purpose, Building Automation, Process Control (Safety, Medical/Analytics planed)
Master boards ..... Core: Cortex-M3/4, ARM9/11, PIC24/32; HMI: 128x64 ... WVGA
Adaption boards..... for LAN, WLAN, CAN, RSxxx, Raspberry Pi, Beaglebone Black
Appliances / Enclosures..... ready Single Box Controller for and top-het rail and wall mounting
Starterkits ..... for MSVC, CODESYS, Raspberry Pi, Beaglebone Black

1.4 Available Host Platforms, Connectivity

emBRICK® can be adapted to all platforms with almost every footprint/performance. For master units, currently the following system implementations are available (others planed):

Computer platforms..... PC, Embedded-PC, Module-PC, Raspberry Pi, Beaglebone Black
µController platforms..... ARM-Ax, ARM-Cortex-Mx, Microchip PIC24 / PIC32
Host Interfaces..... Ethernet, CAN, RS232, RS485
Wireless Interfaces ..... WLAN

1.5 Available Programming Platforms

emBRICK® can be programmed by various systems, languages and IDEs (integrated development interface). Currently for master units the following systems are available (others planed):

OS / RTOS ..... Windows, Linux, FreeRTOS, proprietary
Programming languages ..... C, C++, IEC61131, Model-based (by implementing UML)
Model-based / Soft-PLC ..... CODESYS, radCASE, Enterprise Architect
C/C++ IDEs..... MSVC, Cocox (GCC), MPLab (Microchip), Geany (Raspberry Pi), every other C/C++ IDE

2. Introduction

2.1 About this Manual

This manual contains the overviews and detailed datasheets of all IMACS available *emBRICK®* components. This includes electrical and mechanical characteristics, terminal assignment and hints for their usage.

2.2 References / Manual Overview

For *emBRICK®* and *brickBUS®* the following documents are available. Before reading this document it is recommended to read them in the given order:

System Manual ..... (*embrick_System-Manual_#.pdf*) ... the basic system manual that contains the idea, the intention and the basic technical concept of *emBRICK®/ brickBUS®* like mechanics, electronics and communication protocol. It includes the glossary for all other documents.

Application Examples ..... (*emBRICK_Application-Examples_#.pdf*) ... overview of typical *emBRICK®* device configurations and sample constellations for different industrial applications. It gives an idea how to use *emBRICK®* as an alternative to a normal PLC or an individual PCB / embedded system.

Product Catalogue ..... (*emBRICK_Product-Catalogue_#.pdf*) ... contains the overviews and detailed datasheets of all IMACS-available *emBRICK®* components and products. This includes electrical and mechanical characteristics, terminal assignment and notes about their usage.

Programmers Manual ..... (*emBRICK_Programmers-Manual_#.pdf*) ... is the manual for application software programmers when using established programing systems like Embedded-IDEs, Soft-PLCs, CASE-Tools but also native C/C++-coding.

FAQ Manual ..... (*emBRICK_FAQ-Manual_#.pdf*) ... contains answers to the most frequently asked questions about *emBRICK®* and its usage.

Developers Manual ..... is the manual for system developers, who like to create their own slave modules or master adaptions. It includes all technical details specifications of *brickBUS®* and also sample schematics and code samples of the software stacks. This document is only available on request from IMACS GmbH and needs the agreement on the *emBRICK®* free license conditions. Please contact support@embrick.de.

2.3 Glossary

See appendix of the *system manual*.

3. Product Overview

The listed components below has the following availability:
black = available
blue = under development/testing
gray = planned
brown = discontinued, compatible (better) replacement available

3.1 Master components

Power Supply(needed) **and Globals**
3.3V[A], 5V[B], 12...24V[C], 230Vac[D], 100..240Vac[E]

Interfaces (besides brickBUS)
RS232[A], RS485[B], CAN[C], Socket Modem[D]
SPI[F], I²C[G], serial-TTL[H]
USB-Host/OTG[L], USB-Slave[M], LAN-Ethernet[N], WLAN[O]
miniPCIe[Q]

(Mass) Data Storage
EEPROM[A], Data-Flash[B], SD-Card[C]
HD[F], SSD[G],

OS / Kernel
Proprietary[A], FreeRTOS[B], Windows[C], Linux[D], Android[E]

HMI
Dot-Char[A], Graphic: 128x64[B],
3.5" QVGA[F], 5.7" VGA[G], 7" WVGA[H], 4,3"(480*272)[I]
extern via: VGA[L], LVDS[M], HDMI[N]
interaction: Keys[Q], Wheel[R], R-touch[S],C-touch[T], Beeper[U]

module size [mm]:

Component Name	ID		**features,** number and types #[X] with: #=quantity, [X]=type					Notes
CPU-Boards/Units								
Cortex M0								
	1-51x						-	
Cortex M3 with HMI CBE_...								64 MHz, 512kB-F
	1-515							
CPU-uniCORE-M3-28S	1-516	80 x 80	$1^{B}4^{Q}$	$1^{A/B}$	$1^{A}1^{C}$	1^{M}	-	
CPU-uniCORE-M3-28M	1-517	80 x 80	$1^{B}4^{Q}$	$1^{A/B}$	$1^{A}1^{C}$	$1^{D}\ 1^{M}$	-	
CPU-uniCORE-M3-28L	1-518	80 x 80	$1^{B}4^{Q}1^{U}$	$1^{A/B}$	$1^{A}1^{B}1^{C}$	$1^{D}\ 1^{M}$	-	
Cortex M3 with Touch HMI CBB_...								64 MHz, 512kB-F
CPU-uniMIND-M3-28S	1-521	180 x 116	$1^{B}9^{Q}1^{U}$	$1^{A/B}$	1^{A}	1^{M}	$1^{A}1^{C}$	
CPU-uniMIND-M3-28M	1-522	180 x 116	$1^{B}9^{Q}1^{U}$	$1^{A/B}$	$1^{A}1^{B}1^{C}$	$1^{D}1^{M}$	1^{C}	
CPU-uniMIND-M3-28L	1-523	180 x 116	$1^{B}9^{Q}1^{U}$	$1^{A/B}$	$1^{A}1^{B}1^{C}$	$1^{C}1^{D}1^{M}$	1^{C}	
CPU-uniMIND-M3-28XL	1-524	180 x 116	$1^{B}9^{Q}1^{U}$	$1^{A/B}$	$1^{A}1^{B}1^{C}$	$1^{C}1^{D}1^{M}1^{N}$	1^{C}	
CPU-uniMIND-M3-35M	1-525	180 x 116	$1^{F}6^{Q}1^{S}1^{U}$	$1^{A/B}$	$1^{A}1^{B}1^{C}$	$1^{D}1^{M}$	1^{C}	
CPU-uniMIND-M3-35XL	1-526	180 x 116	$1^{F}6^{Q}1^{S}1^{U}$	$1^{A/B}$	$1^{A}1^{B}1^{C}$	$1^{C}1^{D}1^{M}1^{N}$	1^{C}	
Cortex M4 with Touch HMI CBB_...								200 MHz, 2MB-F
CPU-uniMIND-M4-35S	1-53x							

CPU-uniFront-M4-70C	1-53x							
Cortex M7 with Touch HMI CBB_...								
CPU-uniMIND-M7-01	1-540	190x138	1^{IT}	1^{B}	1^{ABC}	1^{BCDLN}	1^{C}	with all feature
CPU-uniMIND-M7-02	1-541	190x138	1^{IT}	1^{B}	1^{ABC}	1^{DN}	1^{C}	no CAN, no Rs485, no USB
CPU-uniMIND-M7-03	1-542	190x138	1^{IT}	1^{B}	1^{ABC}	1^{BCDLN}	1^{C}	with all feature
CPU-uniMIND-M7-04	1-540	190x138	1^{IT}	1^{B}	1^{ABC}	1^{ACDLNO}	1^{C}	No RS485/232
ARM 9 with Touch-HMI (not recommended for new designs)								400 MHz, 64MB-F
CPU-uniBrain-1-57R-O	1-561	148x105	$1^{G}1^{S}$				1^{C}	5.7" resistive touch
CPU-uniBrain-1-70C-I	1-562	148x105	$1^{H}1^{T}$				1^{C}	7.0" cap. touch
CPU-uniBrain-1-VGA	1-563	148x105	1^{L}				1^{C}	external display
Cortex A8 with Touch-HMI CBB_...								>800 MHz
CPU-uniBRAIN-A8-01	1-571	196x100	opt. 1^{H}	1^{D}		$1^{A}1^{B}1^{C}1^{D}$	1^{C}	opt: RGB-display with cap touch
CPU-Idren-A8-01	1-572	196x100	opt. 1^{H}	1^{D}		$1^{A}1^{B}1^{C}1^{Q}$	1^{C}	opt: RGB-display with cap touch
Coupling Units								
LAN, WLAN, CAN, serial CAE_...								
Z-CouplingBrick-01	1-601	99 x 72		1^{B}	$1^{A}1^{B}$	$1^{A}1^{B}1^{C}1^{N}1^{O}$	1^{C}	with all features
Z_CouplingBrick-02	1-602	99 x 72		1^{B}	$1^{A}1^{B}$	$1^{A}1^{B}1^{C}1^{N}$	1^{C}	no WLAN
Z-CouplingBrick-03	1-603	99 x 72		1^{B}	$1^{A}1^{B}$	1^{N}	1^{C}	only LAN
Z-CouplingBrick-04	1-604	99 x 72		1^{B}	$1^{A}1^{B}$	$1^{A}1^{B}1^{C}$	1^{C}	only RSxx. CAN
Z-patBridgeMX-11	1-611	68 x 88						with all features
Z-patBridgeMX-12	1-612	68 x 88						only LAN
Z-uniBridgeMX-13-RB	1-613	68 x 88						with all features
Z-uniBridgeMX-14-RB	1-614	68 x 88						only LAN
Z-AirBridgeMX-11	1-615	44 x 72						no options
Z-NanoSerial-M32-01	1-6xx							
Z-NanoSerial-M32-02	1-6xx							
Z-NanoSerial-M32-03	1-6xx							
Z-NanoSerial-M32-04	1-6xx							
Adapting Boards								
Raspberry Pi CAE_...								only adapter
Z-RasberryBrick-01	1-701	99 x 72	1^{N}	$1^{C}1^{D}$ 1^{E}	1^{A}	$1^{A}1^{B}1^{H}1^{L}1^{N}$	1^{C}	with all features
Z-RasberryBrick-02	1-702	99 x 72	1^{N}	$1^{C}1^{D}$ 1^{E}		$1^{H}1^{L}1^{N}$	1^{C}	without: RS232/485, RTC, EEPROM. Li-Bat
Z-RasberryBrick-10-RB	1-703	68 x 88	1^{N}	$1^{C}1^{D}$ 1^{E}		$1^{A/B}1^{C}$ $1^{H}1^{L}1^{N}$	1^{C}	Optimized for CoDeSys

Beaglebone Black CAE_...								only adapter
CAE_Z-BeagleboneBrick-01	1-711	99 x 72	1^{N}	$1^{C}1^{D}$ 1^{E}	1^{A}	$1^{A}1^{B}1^{C}$ $1^{L}1^{M}1^{N}$	1^{C}	with all features
CAE_Z-BeagleboneBrick-02	1-712	99 x 72	1^{N}	$1^{C}1^{D}$ 1^{E}		$1^{L}1^{M}1^{N}$	1^{C}	without: RS232/485, RTC, EEPROM. Li-Bat
CAE_Z-BeagleboneBrick-11-RB	1-713							With 1,44” Display
CAE_Z-BeagleboneBrick-12-RB	1-714							
CAE_Z-BeagleboneHMI-01 (=CPU-uniBRAIN-A8-01)								
Arduino CAE_...								only adapter
CAE_Z-ArduinoBrick-01	1-721	99 x 72		1^{A}		1^{B}	1^{C}	

3.2 Slave Components

A suffix after the 2nd "-" indicates alternative frontend connector types (e.g. G-8Di8Do-01-a). This is only supported for selected bricks. For details see the brick description.

other IOs
Drive: DC-1Q[A], DC-4Q[B], Stepper-2P[C], Servo-3P[D]
Solenoid: Prop[F]
Valve head: Clack Control [L], ClackAltern[M],
Resolver: Unidir[Q], SinCos[R],

analogue Output
U/I: 0..10V[A], 0..20mA[B], PWM 24V[C], PWM o.k.[D], 0..36V[E]
Light: 230V-Dimmer[F] ,LED-Dimmer-U[G], LED-Dimmer-I[H], [J], [K],
others: E-Cell[L],

analogue Input
0..10V[A], 0/4..20mA[B], 0..5V[C], 0..2.5V[D], others [E],
Temp-KTY2k [F], Temp-PT1000 [G], Temp-PT100 [H], Temp-NiCrNi [J], [K]
Conductivity [L], pH-Value [M], Redox [N], Pot-Stat [O], Isolated[P]
LDR [Q], Absorption[R], 0..30V[S], 0..40V[T], [U],
230V: Voltage AC [V], Current AC [W], [X], [Y], [Z]

digital Output
com. ground: 24Vdc [A], o.K. [B], o.K. isolated [C],
Relay 230V: 1Ph-NO [F], 1Ph-CO [G], 1Ph-NC [H], 3Ph-NO [I]
Relay isolated: NO [L], CO [M], NC[N]

digital Input
com. GND: 24Vdc [A], ext. contact [B],
isolated.: 5Vdc[G] , 24Vdc[H], 230Vac[I]
Pulse: ext. NPN[L], ext. PNP[M], AB-Resr[N],

module size/width [mm]:
(###): 72mm x <width>
(###-RB) RailBox: 86,5mm x <width>
(###): 107,5mm x <width> T

Module Name CAE_ ...	ID		**IO number and types** #[X] with: #=quantity, [X]=type					Notes
General Purpose	2-xxx							
G-8Di8Do-01(-a/-b)	2-181	44	8[A]	8[A]				IOs: 24V
G-16Di-01	2-182	44	14[A]2[H]					2 galv.iso.
G-8Rel8Di-01-RB	2-183	RB	8[A]	8[M]				
G-4Do-01-RB	2-184	RB		4[A]				
G-4Di4Do	2-185	44	4[A]	4[A]				IOs: 24V
G-2RelNo4RelCo-01	2-301	66		2[L] 4[M]				Relay contacts: 5A
G-3RelNo-01	2-302	88		3[L]				Relay contacts: 230V 16A
G-3RelNo-02	2-303	88		3[L]				Relay contacts: 400V 6A
G-6Ai2Tmp-01	2-420	44			6[A] 2[F]			0..10V; KTY2k, 0..50°C
G-6Ai2Tmp-02	2-421	44			6[A] 2[G]			0..10V; PT1000, 0..50°C
G-6Ai2Tmp-03	2-422	44			6[B] 2[F]			0/4..20mA; KTY2k, 0..50°C
G-6Ai2Tmp-04	2-423	44			6[B] 2[G]			0/4..20mA; PT1000, 0..50°C
G-4Ai4Tmp-01	2-431	44			4[B] 4[F]			0/4..20mA; KTY2k, 0..50°C
G-4Ai4Tmp-02	2-432	44			4[B] 4[F]			0/4..20mA; KTY2k, 0..110°C
G-4Ai4Tmp-03	2-433	44			4[B] 4[G]			0/4..20mA; PT1000, -50..350°C
G-4Ai4Tmp-04	2-434	44			4[S] 4[F]			0..30V; KTY2k, 0..50°C
G-4Ai4Tmp-05	2-435	44			4[S] 4[F]			0..30V; KTY2k, 0..110°C
G-4Ai4Tmp-06	2-436	44			4[S] 4[G]			0..30V; PT1000, -50..350°C
G-5Ai3Imp-01	2-451	44	3[L/B]		5[A]			0..10V; NPN-pulse
G-5Ai3Imp-02	2-452	44	3[M/B]		5[A]			0..10V; PNP-pulse

G-5Ai3Imp-03	2-453	44	$3^{L/B}$		5^{B}			0.. 20mA; NPN-pulse
G-5Ai3Imp-04	2-454	44	$3^{M/B}$		5^{B}			0.. 20mA; PNP-pulse
G-5Ai3Dcyc-01	2-461	44	$3^{L/B}$		5^{D}			0..2.5V; NPN-pulse
G-5Ai3Dcyc-02	2-462	44	$3^{M/B}$		5^{D}			0..2.5V; PNP-pulse
G-5Ai3Dcyc-03	2-463	44	$3^{L/B}$		5^{B}			0/4..20mA; NPN-pulse
G-5Ai3Dcyc-04	2-464	44	$3^{M/B}$		5^{B}			0/4..20mA; PNP-pulse
G-2Mi2Ao-01	2-470	33	$2^{A/B/L}$		$2^{A/B}$	2^{A}		multi Input (Di, Ai, Imp)
G-2Mi2Ao-02	2-471	33	$2^{A/B/L}$		2^{A}	1^{A} 1^{B}		multi Input (Di, Ai, Imp)
G-2Mi2Ao-03	2-472	33	$2^{A/B/L}$		$2^{A/B}$	2^{B}		multi Input (Di, Ai, Imp)
G-RelMiAo-01	2-473	33						Out: 0..10V
G-RelMiAo-02	2-474	33						Out: 0/4..20mA
G-6Rel6Di2Ai2Ri-01-RB	2-481	RB	6^{A}	2^{L} 4^{M}	2^{A} 2			In: 0..10V;
G-6Rel6Di2Ai2Ri-02-RB	2-482	RB	6^{A}	2^{L} 4^{M}	2^{B} 2			In: 0..20mA
G-6Ai2Ao2Ai4Tmp-01-RB	2-483	RB			$6^{B}4^{G}2^{T}$	2^{A}		In: 0..20mA, 0..40V; Out: 0..10V
G-6Ai2Ao2Ai4Tmp-02-RB	2-484	RB			$6^{B}4^{G}2^{T}$	1^{A} 1^{B}		In: 0..20mA, 0..40V; Out: 0..10V+0..20mA
G-6Ai2Ao2Ai4Tmp-03-RB	2-485	RB			$6^{B}4^{G}2^{T}$	2^{B}		In: 0..20mA, 0..40V; Out: 0..20mA
G-DPS2Ai2Ao-04-RB	2-490	RB			$2^{A/B}$			
G-DPS2Ai2Ao-05-RB	2-491	RB			$2^{A/B}$			
G-DPS2Ai2Ao-06-RB	2-492	RB			$2^{A/B}$			
G-MotDC4Ai-01	2-511	66			4^{E}		1^{B} 1^{R}	1 DC-Mot, 6/12A, 50V
G-3MotDC3Ai-2Imp-01	2-512	66	2^{L}		3^{E}		3^{B} 1^{Q}	DC-Mot, 500mA, 24V
G-StpDiDoRes4A	2-521	66	1^{A}	1^{A}			1^{C} 1^{R}	1 stepper motor 4A
G-2Stp2Di2Do2A	2-522	66	2^{A}	2^{A}			2^{C}	2 stepper motors 2.5A
G-2ComSens-01	2-801	44						Electrically coupled version with autodetection software. Useable for :useable for: CAI_SB-xxx CAM_SB-xxx
G-2ComSens-11	2-811	44						Electrically isolated version with autodetection software. Useable for: CAI_SB-xxx CAM_SB-xxx
Safety Automation	3-xxx							prospective
Building Automation	4-xxx							
B-8Temp-01	4-401	44			8^{F}			KTY2k, -30...80°C
B-8Temp-02	4-402	44			8^{F}			KTY2k, 5...45°C
B-8Temp-03	4-403	44			8^{G}			PT1000, -30...80°C
B-8Temp-04	4-403	44			8^{G}			PT1000, 5...45°C
B-6Moti2LDR-01	4-411	44			6^{C} 2^{Q}			IR-motion detector; LDR
B-4Dim230T-01 B-4Dim230T-01-RB	4-541	88 103				4^{F}		230Vac, max. 1,6A, lead./trail. edge
B-4DimLedU-01	4-561	55				4^{G}		0..100% PWM, max 40V/2A
B-4DimLedI-01	4-565	55				4^{H}		0...350mA, max. 40V
B-4DimLedI-02	4-566	55				4^{H}		0...700mA, max. 40V

B-LedWS2812-01	4-567	44						for LED WS2812
B-3U3I-400-01-RB	4-601	66						Power meas., int. sensor
B-3U4I-400-01-RB	4-602	66						Power meas., current transf.
B-3U4I-400-02-RB	4-603	66						Power meas., current transf.
B-3U4I-400-10-RB	4-610	66						Power meas. ext hall sensors.
Process Control	5-xxx							
P-112Rel-01	5-101	66		3^{F} 1^{G}				Relay: 16/8/5A
P-112RelPow-01	5-102	66		3^{F} 1^{G}	1^{W}			Relay: 16/8/5A; Meas: 0..10A_{eff}
P-2Rel6Di-01	5-122	66	6^{B}	2^{M}				Relay: 5A
P-2Rel4Di2Ai-01	5-131	66	4^{B}	2^{M}	2^{A}			Relay: 5A, 0..10V
P-2Rel4Di2Ai-02	5-132	66	4^{B}	2^{M}	2^{B}			Relay: 5A, 0.. 20mA
P-6Rel5DiPow-01	5-302	110	5^{B}	2^{F} 2^{G} 2^{M}	1^{W}			Meas: 0..1/10A_{eff}
P-6Rel5Di-01	5-303	110	5^{B}	2^{F} 2^{G} 2^{M}				Meas: 0..1/10A_{eff}
P-5Rel3DiPoPow-01	5-304	88	3^{B}	1^{C} 1^{F} 1^{G} 3^{M}				
P-5Rel3DiPoPow-02	5-305	88	3^{B}	1^{C} 1^{F} 1^{G} 3^{M}	1^{W}			
P-LfTmpAoDAioImp-01	5-511	44	1^{L}	1^{A}	1^{L} 1^{F} 1^{B}	1^{B}		0/4..20mA; KTY2k
P-LfTmpAoDAioImp-02	5-512	44	1^{L}	1^{A}	1^{L} 1^{F} 1^{A}	1^{B}		0..10V; KTY2k
P-LfTmpAoDAioImp-03	5-513	44	1^{L}	1^{B}	1^{L} 1^{H} 1^{B}	1^{B}		0/4..20mA; PT100
P-LfTmpAoDAioImp-04	5-514	44	1^{L}	1^{B}	1^{L} 1^{H} 1^{A}	1^{B}		0..10V; PT100,
P-LfTmpAo2DioImp-01	5-515	44	$1^{L/B}$	1^{B}	1^{L} 1^{F} 1^{A}	1^{B}		with 2 pulse inputs
P-LfTmp2Pi2AiAo-01	5-516	44	$2^{L/B}$		$2^{B}1^{G}1^{L}$	1^{B}		0/4..20mA; PT100, -10..+50°C
P-LfTmp2Pi2AiAo-02	5-517	44	$2^{M/A}$		$2^{A}1^{G}1^{L}$	1^{B}		0..10V; PT100, -10..+50°C
P-LfTmp2Pi2AiAo-03	5-518	44	$2^{L/B}$		$2^{B}1^{F}1^{L}$	1^{B}		0/4..20mA; KTY2k, -10..+50°C
P-LfTmp2Pi2AiAo-04	5-519	44	$2^{M/A}$		$2^{A}1^{F}1^{L}$	1^{B}		0..10V; KTY2k, -10..+50°C
P-2LfTmp-01	5-520							
P-2LfTmp-02	5-521							
P-2CcvCav4Do2Imp-01	5-601	66	4^{A}		1^{L}		2^{L} 1^{M}	supports: 2 softener control valve, 1 alternator valve
P-2Ecell-01	5-602 [5-605]	44				4^{L}		max. 15V/0,5A
P-pHTmpAoDAioImp-01	5-603	55	$1^{L/B}$	1^{B}	1^{M} 1^{F} 1^{B}	1^{B}		±-450mV ultra low current isolated input for glass electode single-rod measuring cell (e.g. pH value), available for: KTY/PT100, 10V/20mA Inp.
P-pHTmpAoDAioImp-02	5-604	55	$1^{L/B}$	1^{B}	1^{M} 1^{F} 1^{A}	1^{B}		
P-pHTmpAoDAioImp-03	5-612	55	$1^{L/B}$	1^{B}	1^{M} 1^{H} 1^{B}	1^{B}		
P-pHTmpAoDAioImp-04	5-613	55	$1^{L/B}$	1^{B}	1^{M} 1^{H} 1^{A}	1^{B}		
P-RdxTmpAoDAioImp-01	5-611	55	$1^{L/B}$	1^{B}	1^{N} 1^{F} 1^{B}	1^{B}		±-2000mV ultra low current isolated input
P-RdxTmpAoDAioImp-02	5-606	55	$1^{L/B}$	1^{B}	1^{N} 1^{F} 1^{A}	1^{B}		
P-IsoTmpAoDAioImp-01	5-607	55	$1^{L/B}$	1^{B}	1^{P} 1^{F} 2^{B}	1^{B}		0/4..20mA input isolated input
P-IsoTmpAoDAioImp-02	5-608	55	$1^{L/B}$	1^{B}	1^{P} 1^{F} 1^{A}	1^{B}		
P-UlcTmpAoDAioImp-01	5-609	55	$1^{L/B}$	1^{B}	1^{P} 1^{F} 2^{B}	1^{B}		0...250mV, ultra low current isolated input
P-UlcTmpAoDAioImp-02	5-610	55	$1^{L/B}$	1^{B}	1^{P} 1^{F} 1^{A}	1^{B}		
P-PotStat-01	5-??	??						
Testing	6-xxx							prospective

T-4Di4Do-01	6-101							X
T-4Ai4Ao-01	6-401	66T			$4^{A}2^{F}$	4^{E}		X
T-4Ai4Ao-02	6-402	66T			$4^{E}2^{F}$	4^{E}		
T-4Ai4Ao-11	6-411	66T			$4^{A}4^{E}2^{F}$	4^{E}		
T-4Ai4Ao-12	6-412	66T			$4^{E}4^{E}2^{F}$	4^{E}		
Medical/Analytic	7-xxx							prospective
Education / Others	8-xxx							prospective
E-BreakoutM0-1	8-101							
IDs 8-201 to 8-204 are already existing								
Customer	9-xxx							

3.3 Passive Components

Feature A
Pieces per package.

Feature B
t.b.d.

Subbrick Functions/Features
Impedance[A], Temperatur[B], Potentiostat[C], RS232[D], RS485[E], CAN[F]

Max. Cable Gland possible
M12[A], M16[B], M20[C]

Enclosure (Standards all via Bolpa)
Bocard[A], RCP[B], CombiCARD[C], Alubos[D], Euromas[E]

Module width in mm

Component Name	ID		**Features, number and types** #[X] with: #=quantity, [X]=type					Notes
Carrier Boards								1eU = 11mm
CAE_Y-CHBoc160			A					1 row x 14eU + 1 row 4eU
CAE_Y-CHBoc200			A					1 row x 17eU + 1 row 16eU
CAE_Y-CHBoc250			A					1 row x 20eU + 1 row 19eU
CAE_Y-CHBoc310			A					rows x 24eU
CAE_Y-CHBoc400			A					rows x 31eU
CAE_Y-CHRcp2000			B					??
CAE_Y-CHRcp2500			B					??
CAE_Y-CHRcp2000F			B					second Carrier board layer
CAE_Y-CHRcp2500F			B					second Carrier board layer
CAE_Y-CHCc5000			C					??
CAE_Y-CHCc6000			C					??
CAE_Y-CHCc7000			C					3 rows x 23eU
CAE_Y-CHAbo1600			D					2 rows x 18eU
CAE_Y-CHT250			E					
CAE_Y-CHT255			E					
Enclosure								## = CPU: 28, 35, 43, 70
CAH_Boc160-##				2[A]2[B]				Bocard 160
CAH_Boc200-##				3[A]4[B]				Bocard 200
CAH_Boc250-##				6[A]7[B]5[C]				Bocard 250
CAH_Boc310-##								Bocard 310
CAH_Boc400-##								Bocard 400
CAH_Boc200F-##								Bocard 200 Front Frame
CAH_Boc250F-##								Bocard 250 Front Frame
CAH_Boc310F-##								Bocard 310 Front Frame
CAH_Boc400F-##								Bocard 400 Front Frame
CAH_Rcp2000-##								RCP 2000
CAH_Rcp2500-##								RCP 2500
CAH_Rcp2000F-##								RCP 2000 Front Frame
CAH_Rcp2500F-##								RCP 2500 Front Frame
CAH_Cc5000-01								CombiCard RD5000
CAH_Cc6000-01								CombiCard RD6000
CAH_Cc7000-01								CombiCard RD7000
CAH_Abo1600-01								Alubos 1600

CAH_T250-01								Euromas T250
CAH_T255-01								Euromas T255
CAH_Cg12-01								Cable Gland M12
CAH_Cg16-01								Cable Gland M16
CAH_Cg20-01								Cable Gland M20
CAH_TkPc-3625-Tm								Spelsberg
Rail-Enclosure								
CAH_RCa11							5	top-hat rail 11mm
CAH_RCa22							5	top-hat rail 22mm
CAH_RCa45							5	top-hat rail 45mm
CAH_RCaEnd							2	top-hat rail termination
CAH_RCaFix							2	top-hat rail attachment
CAH_Plexi-##								##= 44, 55, 66,88,
CAH_Spacer30		3					25	
CAH_Spacer40		4					25	
CAH_Spacer50		5					25	
Adaptors, Connectors								
CAE_X-ExpF10_01		22						
CAE_X-ExpM10_01		11						
CAE_X-ExpFlatM10_01								
CAE_X-ExpFlatF10_01								
CAE_X-ExpRect15_01								90° Adapter
CAE_X-10Wire20								20cm
CAE_X-10Wire20-no3V3								20cm without 3V3
CAE_X-10Wire30								30cm
CAE_X-10Wire30-no3V3								30cm without 3V3
CAE_X-10Wire54								54cm
CAE_X-10Wire54-no3V3								54cm without 3V3
CAE_X-Pow3Cable6_01								3 line power cable 6cm
CAE_X-Pow3Cable12								3 line power- Supply
CAE_X-MolexKK-24V								2 wire only starterkit
CAC_X-LAN-fc								female connector for LAN
CAC_X-LAN-mc								male connector for LAN
CAC_X-USB-fc								female connector for USB
CAC_X-USB-mc								male connector for USB
CAE_X-HMI-01								Adapter LCD Emerging Displays Familie Concept to CAE_Z_LCSUL-Beagle-0#
CAE_X_Clack9-01								For CAE_P-2CcvCav4Do2Imp
CAE_X-AdaBox-FBFBM-Isoinject24-RB-01		18						
CAE_X-AdaVertF2B-01								
CAE_X-AdaVertB2FB-01								
CAE_X-AdaBox-RB-01		36						
CAE_X-AdaBoxInject24-RB-01		36						
CAE_X-Adainject24-01		22						

Control Power supply								
CAE_X-Inject230-20SM-01								use CAE_X-Inject230-30SM-01
CAE_X-Inject230-20SM-10								
CAE_X-Inject230-30SM-01								
CAE_X-Inject230-60SM-01								
CAS_Sw16-##								Switch 2pol. 16A ##: 01=50cm 02=21cm
CAS_Sw25-3p								Drehstromschalter 25A
CAS_Pow3p25A-B400-01								3Phasen Einspeiseung
CAS_Sock1p16A-IP65-01								Steckdose
Display Units								
CAD_TiaBoc200-70C-01								
Actor Power supply								
CAP_Drive3p25A-01								
Tools								
CAE_MountCarrier-01								
Subbricks								
CAM_2SB-ImpTmp-01	1	44			$1^{A}1^{B}$			
CAM_2SB-PotTmp-01	2	44			$1^{B}1^{C}$			
CAI_SB-RS232-01	3	22			1^{D}			
CAI_SB-RS485-01	4	22			1^{E}			
CAI_SB-CAN-01	5	22			1^{F}			
CAI_SB-Breakout-01	6	22						
CAI_SB_1-Wire-01	7	22						
Reserved	8	22						
CAI_SB_D0-Opto-01	9	22						
CAI_SB_D0-Opto-02	10							

3.4 Packages

Packages contain application-/ sector specific bundles compiled with the components listed above. Often they are the basic frame for a customized controller that will be completed by a mix of corresponding I/O-modules.

Component Name	ID		**feature** number and types #^{X} with: #=number, ^{X}=type					Notes
Controllers compact, enhoused								
CCB_CORE1-B160gl-28M								11eU + 4eU
CCB_MIND1-B200-28S								14eU + 10eU
CCB_MIND1-B200-28M								14eU + 10eU
CCB_MIND1-B310-28M								24eU + 18eU + 21eU
CCB_MIND1-B250-28L								
CCB_MIND1-B200-35L								14eU + 10eU
CCB_MIND1-B250-35XL								
CCB_MIND1-B400-35XL								
CCB_BRAIN1-B250-70R								
CCB_BRAIN1-B310-70R								24eU + 18eU + 21eU
CCB_BRAIN1-B400-70R								
CCB_BRAIN1-BoTo-70C								
CCC_IMPACT1-B250-35T								
Startertkits								
TES_eB-STK-M1								with CPU-uniMind-1-28XL
CouplingBrick Starterkit-1								with Z-LWCS-M32-02
RaspberryBrick Starterkit-1								with Z-LSUH-Raspberry-02
BeagleboneBrick Staterkit-1								with Z-LCSUL-Beaglebone-02

4. Global Information

The information below refers to all items and components of this document.

4.1 Component Identification

All components have a unique identification string, the module-name.

<G>-<8Di8Do>-<##> with:

component group, I/O-constellation, variant

Sample:

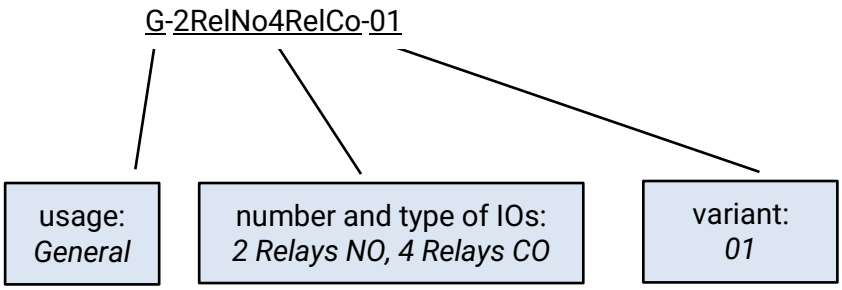

4.2 Product Descriptor

Each component in this document has a brief descriptor at the top of its datasheet. If more than one similar variant of one module exists, the corresponding identifier will appear multiple times.

number and types of the I/Os and special remarks

module identification, transfered to the master during initialisation

used emBRICK core design (= µC type and pin assign-ments)

detailed order codes

1x **Relay-Output**, NO, supply switching
1x **Relay-Output**, CO, supply switching
2x **Relay-Output**, NO, supply switching

CAE_P-112RelPow-01: contains an additional AC-current measurement

Modul ID	5-101 / 5-102		
Order No.	CAE_P-112Rel-01 CAE_P-112RelPow-01		
Terminals	**push-in** (for ≤ 0.5mm²)	Core	M16D
Size	**6 eU** (66mm x 72mm)	BB_{FCP}	1-1-1
Variants (# =)	**(none):** no current sens. **Pow:** AC-current sensor		

type of terminals and useable cables

size of the module
1eU = 11mm x72mm
n eU = (n x 11)mm x 72mm

brickBUS classifiers (see also System Manual):
BB_{FCP} is a compilation of the three clas-sifiers
first digit: **f**ormat category
second digit: **c**onnection category
third digit: **p**erformance category

4.3 Standards and Approvals

IMACS supplied emBRICK® master, couplers and slave modules are normally checked by IMACS for electromagnetic compatibility (EMC) and meet the required standards.

All modules which have been checked and meet these standards have a "*" mark in the 3rd column of the "Module ID" line.

Unless otherwise indicated, all components corresponds to:
EMC immunity/emission ..... conforms to EN 61000-6-2, EN 61000-6-4
Protection class..... IP 10 (without cover)
Protection class with cover ..... IP 20 (with cover)
Approvals..... CE

4.4 Common technical data

(unless specified different in the other chapters)

Storage conditions ..... -20...+70°C
Operating conditions ..... -10...+50°C (other ranges on request)
Air humidity ..... < 85% without condensation
Installation positions..... flat (on patch board), rail (in top rail head housing)
Housing..... open frame (cover optional)

4.5 Ground adaption/connection

WARNING

Most slave modules (see technical data) support an I/O ground that is separated from the bus ground to avoid noise, current loops or too high currents over the bus ground.

Note: It is not isolated in the common sense.

Therefore in all operation modes this I/O ground (of the terminals) **either has to be** ...

a) **connected to an external ground** (recommended for modules with non isolated outputs like semiconductor outputs). This external ground(s) must have the same potential than the bus ground.

... **or** ...

b) **connected to the bus ground** (recommended for modules with inputs and floating sensors). For this, some modules offer two separate clamps.

To avoid potential difference between the grounds (in case of errors or wrong installation), the separate IO ground is connected inside of the modules via a 100 Ohm resistor parallel with two (antiparallel) schottky-diodes to the bus ground. This circuit acts only as damage prevention (not guaranteed) and should not be used under normal operation conditions.

4.6 Integration and Protection

ATTENTION

- Thus all *emBRICK®* components are by default open frame modules, they do not have a special protection class (= IP00).
- When using modules without a protective casing, it is possible to come in contact with the supplying voltage. All open metal surfaces, on the front as well as on the back, are possible fully supplied and represents a danger of injury.
- Therefore an integration of the components may take place only inside a corresponding and suitable enclosure. Installation and maintenance work may take place only with technical personnel and with suitable tools!
- Many modules offers high voltage / high power output, realized by relay or semiconductor switches. For a standard conform operation and/or to reduce EM-disturb ion and increase the lifetime of contacts, a corresponding suppressor element (i.e. RC-circuit, varistor etc.) have to be installed. Some bricks with switching-outputs of external power supplies keep integrated suppressor elements (s. data sheets) that are sufficient for standard applications (but not guaranteed). Nevertheless the application engineer is responsible for the correct design and selection of e.g. additional elements.

4.7 Notes for Usage

NOTE

Please consider the following data/updating behavior (unless specified different). For further information about the bus communication and states refer to the appendix in the *system manual*:

- In bus state ***running*** the module will update its outputs (from master) and its inputs (to master) with every correct communication cycle.
- If a module is in the state ***under_com*** or ***disturbed_com*** the IO data of the last correct communication cycle is kept on the IOs until it changes to *no_com*.
- If a slave module is in (or changes into) the bus state ***uninitialized*** or ***no_com***, the signal outputs will be switched to "off-level". “off-level” is equal to the unpowered state of the module.
- Therefore the bus update cycle of the slave modules follows the sequence 1) reading hw-inputs, 2) exchange I/O data with master, 3) writing hw-outputs. The output modification is delayed to the sample point of the inputs. The necessary functional execution time between two communication cycles will delay this further. For more detailed information refer to the *system manual*.
- Most slave modules use the µC-internal RC-oscillator. That results in a possible processor clock deviation of up to ±5% over the given temperature range. This is not relevant for the normal operation but affects all time based measurements (like frequency, periods, duty cycle) in the same way. To compensate this (if necessary), the relevant modules offer the divided RC-oscillator clock in form of an alternating bit that can be read and measured by the (time exact running) bus-master/host-system and used for a compensation calculation.

4.8 Data Location and Access

The location and access to the exchanged IO-data is very simple and does not need any configuration.

For this, the (open) *brickBUS®* driver of the application programming platforms (refer to *Programmers_Manual*) offer simple I/O-functions that only needs the ...

a) brick (= slave module) number (1, 2, ...) inside the string (= brick string) and

b) the byte index of the required IO-data of the slave module.

The available IO-data of each slave module with its index are listed in process data image tables.

Example:

Out-Userdata **from** Master to Slave total: 8 Bytes			**In**-Userdata **to** Master from Slave total: 8 Bytes		
Byte	Function	rC Assign...	Byte	Function	rC Assign...
0+1	Analog-Output 0...12900 Dig. ≡ 0...20.0 mA	... + eB_W0, 0, ...	0+1	Analog Input 1 assignment see below	... + eB_W0, 0, ...
2+3	LF-Measuring Voltage 0...16000 Dig. ≡ 0...100%	... + eB_W1, 0, ...	2+3	Temp.-Input 1 205...970 Dig. ≡ 0...50 °C	... + eB_W1, 0, ...
4	Output setting 0..7 Bit 0 = Output O0 ... Bit 7 = Output O7	 ... + eB_B4, 0, ... + eB_B4, 7, ...	4	Input Image 0..7 Bit 0 = Input I0 ... Bit 7 = Input I7	 ... + eB_B4, 0, ... + eB_B4, 7, ...
5	unused	...	5	unused	
6+7	Pulse Input 1 - control usage see below.	... + eB_W3, 0, ...	6+7	Puls Input 1 - Sum Value usage see below	... + eB_W3, 0, ...

NOTE

- The data transferred from the slave module to the bus master contains another leading module status byte that is covered by the API-functions of the protocol stack and not listed in the table above. If you access the bus direct with e.g. an own stack, you will get one additional byte and the byte index of the "userdata to master" has to be increased by 1.
- For word (16 Bit) or double word (32 Bit) data, the byte-order is big-endian (Motorola-Format), i.e. the most significant byte is the first in the transferred data.

1 CAE Master Components

Apart from the master components listed in this chapter it is of course possible to use other/own components as a master device and/or create your own master device based on the free *brickBUS®* -stack code.

The master components can be separated into the following classes (refer to the *system manual* for details)

ID 1.5xx	**Compact Master**, integral unit, partly supports HMI
ID 1.6xx	**Coupling Master**, bridge unit for operation with separate remote master
ID 1.7xx	**Adaption Master**, for using 3th party CPU-modules

1.1 General information

t. b. d.

1.2 Compact Masters

1.2.1 CBB_CPU-uniMIND-M3 (Cortex-M3)

Local-Master
.. Display (2 variants)
.. Keys or Touch
.. USB
.. RTC, EEPROM
.. Beeper, SD-Card
.. LAN
.. CAN
.. Socket Modem

Modul ID	**1-521, 1-522, 1-523, 1-524, 1-525 1-526**		
Order No.	**CBB_CPU-uniMIND-M3_#***		
Size	(180mm x 116mm x 35mm)	BB$_{F}$ CP	**x-1-1**
Variants: #* =	**28S:** no LAN, no CAN, no Socket Modem, 3V3 supply needed (1-521) **28M:** no LAN, no CAN (1-522) **28L:** no LAN, (1-523) **28XL:** full amount (1-524) **35M:** no LAN, no CAN, touch (1-525) **35XL:** full amount, touch (1-526)		

1.2.1.1 Connectors and Indication-/Operation-Elements

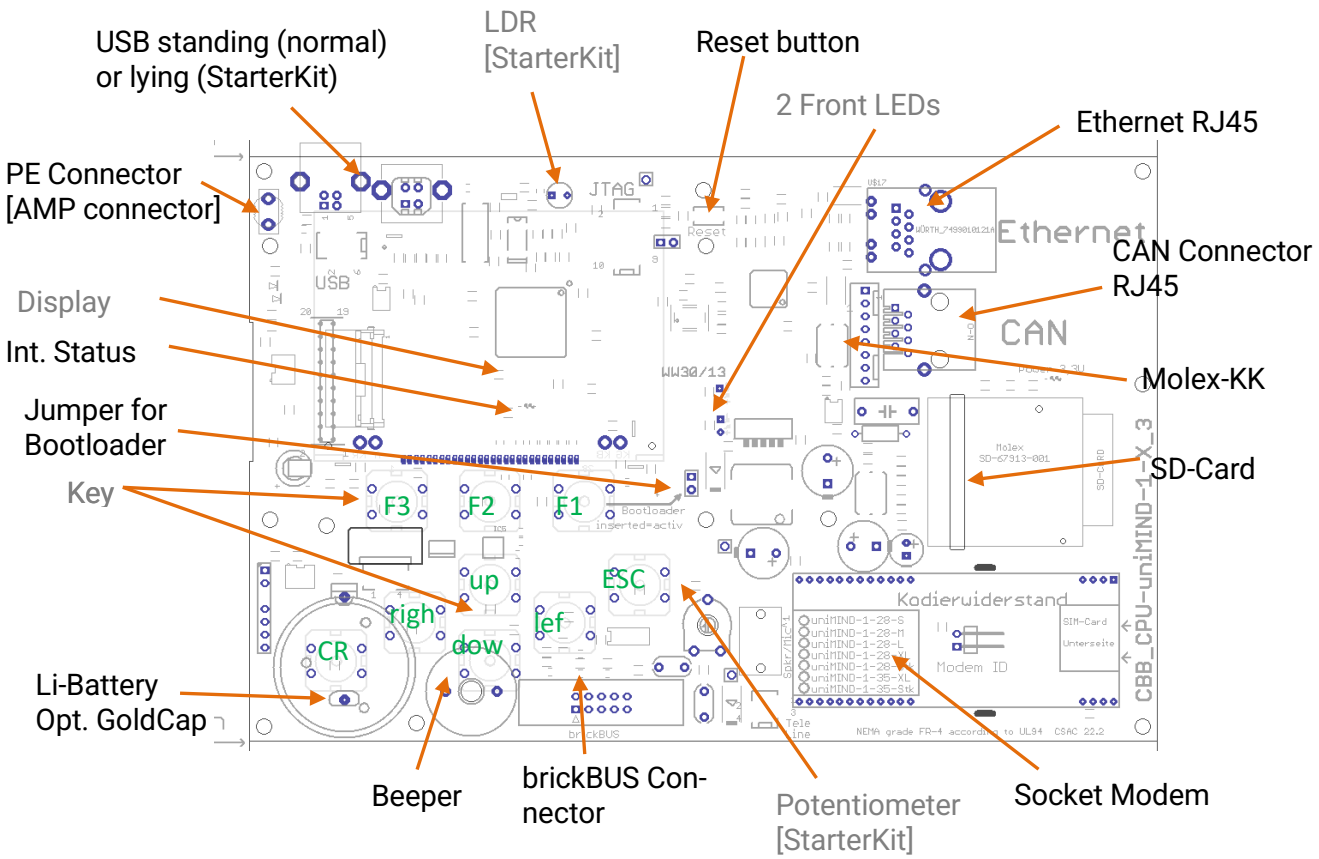

Grey = mounted on the other side.

1.2.1.2 Picture Description

CBB_CPU-uniMIND-M3-28#
(frontside, with 128x64 Dot display)

CBB_CPU-uniMIND-M3-28M
(backside)

CBB_CPU-uniMIND-M3-35#
(frontside, with QVGA-Touch-Display)

(backside as shown above)

1.2.1.3 Technical Data

Input/Output:
Front LEDs ..... red, green for application use
Back LEDs ..... 2x yellow (for system use)
Inputs ..... LDR and potentiometer (both only Starter Kit)

Display types / HMI:
2.8", 128x64 dots with RGB backlight, 9 keys (CBB_CPU-uniMind-M3_28?)
3.5”, QVGA, resistive touch, 6 keys (CBB_CPU-uniMind-M3_35?)

General:
supply voltage..... 24 V DC ±10 % over CAN or brickBUS connector
output supply capability..... nominal: 0,3A@24V, 1A@3.3V
specials ..... StarterKit variant available
RTC supply (power off) ..... Li-Battery, approx. 5 years
..... alternatively GoldCap, approx. 3 days

Mechanical specification:
dimensions (w)x(l)x(h): ..... 180 x 116 x 35 mm
weight ..... ca. 200 g

Communications ..... via COM-Modules (Socket-Modem Connector)
RS232, RS422, RS485, LAN, WLAN, GPRS, BlueTooth, ProfiBus, ModBUS, … others on request

1.2.1.4 Terminal Assignment

Circuit Example	Ident.	Term	Function	Usage	internal simplified diagram

1	**ST6/1**	CAN	+24V out	
-	**ST6/2**		GND	
-	**ST6/3**		n.c.	
-	**ST6/4**		CAN-H	
-	**ST6/5**		CAN-L	
-	**ST6/6**		n.c.	
-	**ST6/7**		GND	
-	**ST6/8**		+24V out	

Note: ST6 is RJ45 and ST1 is Molex KK with the same pinout

1.2.2 CBB_CPU-uniCORE-M3 (Cortex-M3)

Local-Master
.. Display (128x64 dots)
.. 4x Keys
.. USB mini
.. RTC, EEPROM
.. Beeper, SD-Card
.. Socket Modem

Modul ID	**1-516, 1-517, 1-518**		
Order No.	**CBB_CPU-uniCORE-M3_#***		
Size	(80mm x 80mm x 35mm)	BB_{FCP}	**x-1-1**
Variants: #* =	**S:** no SD, no Beeper, no Data-Flash, no COM-Module Connector, no RTC, no ST2 (1-516) **M:** no Beeper, no Data-Flash, no ST2 (1-517) **L:** SD, USB, Beeper, emBRICK, Data-Flash, Socket-ConnectorModul, RTC(Li-Bat), 3V3 supply needed, no ST2 (1-518)		

1.2.2.1 Connectors an Indication-/Operation- Elements

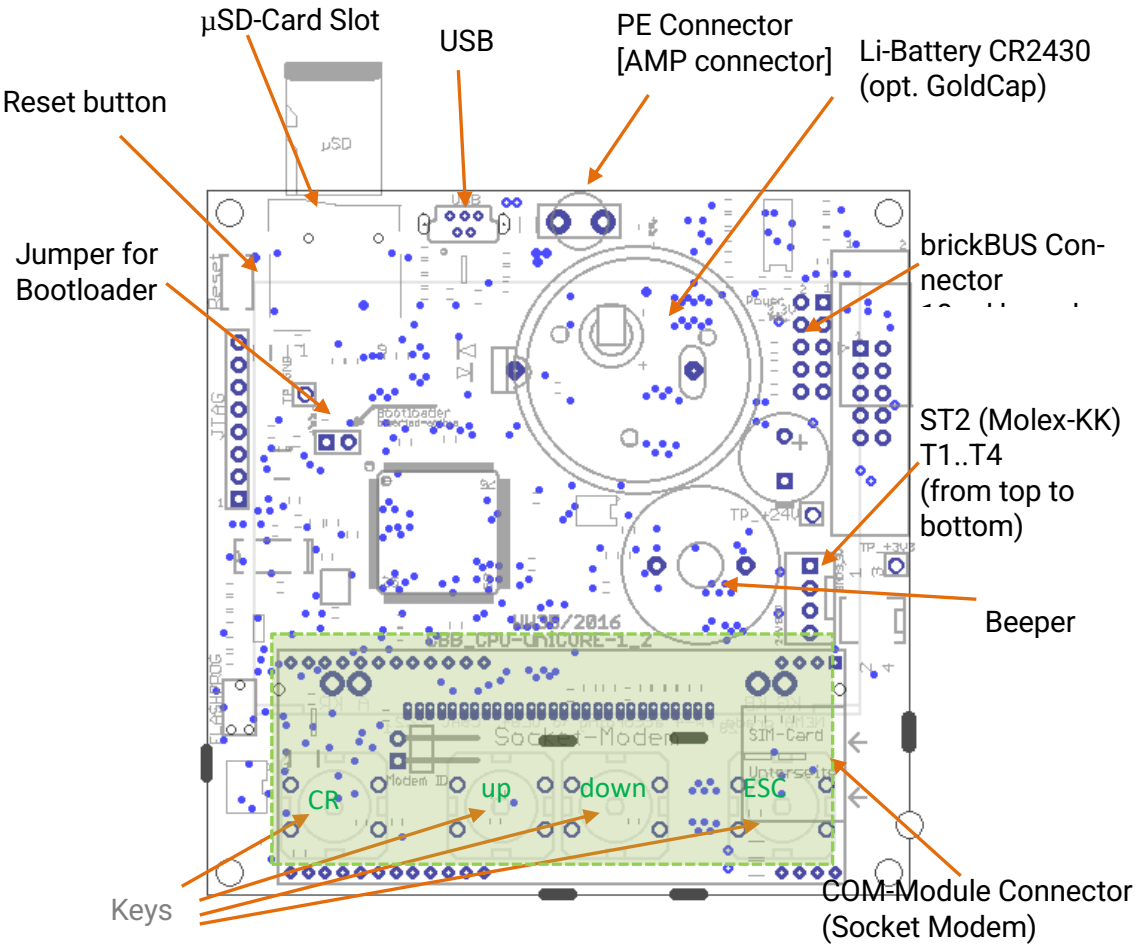

Grey = mounted on the other side.

1.2.2.2 Technical Data

Input/Output:
Back LEDs ..... green and red for system use
Beeper ..... for application use

Display types / HMI:
2.8", 128x64 dots with RGB backlight, 4 keys

General:
supply voltage..... 24 V DC **and** 3,3V ± 0,15V over ST2 or brickBUS connect
(24V not only for external consuptors)
own current consumption ..... nominal: 170mA@3.3V
RTC supply (power off) ..... Li-Battery, approx. 5 years
..... alternatively GoldCap, approx. 3 days

Mechanical specification:
dimensions (w)x(l)x(h): ..... 80 x 80 x 35 mm
weight ..... ca. 85 g

Options:
Communications ..... via COM-Modules (Socket-Modem Connector)
RS232, RS422, RS485, LAN, WLAN, GPRS, BlueTooth, ProfiBus, ModBUS, ... others on request

1.2.2.3 Terminal Assignment

Circuit Example	Ident.	Term	Function	Usage	internal simplified diagram
--------	1	**ST2/1**	Power Supply	+3,3V in	
--------	-	**ST2/2**		GND	
--------	-	**ST2/3**		GND	
--------	-	**ST2/4**		+24V in	

1.2.3 CBB_CPU-uniMIND-M4 (Cortex-M4)

t.b.d.

1.2.4 CBB_CPU-uniMIND-M7 (Cortex-M7)

Local-Master
.. 4.3” Display
.. Capacitive Touch
.. SDRAM
.. USB
.. RTC, EEPROM, Data Flash
.. Beeper, SD-Card
.. LAN
.. CAN
.. RS485
.. Socket Modem

Modul ID	**1-540**		
Order No.	**CBB_CPU-uniMIND-M7-0#**		
Size	(190mm x 138mm x 35mm)	BB_F CP	**x-1-1**
Variants: #* =	**01:** fully equipped, touch (1-540) **02:** no CAN, no RS485, no USB (1-541)		

1.2.4.1 Connectors and Indication-/Operation-Elements

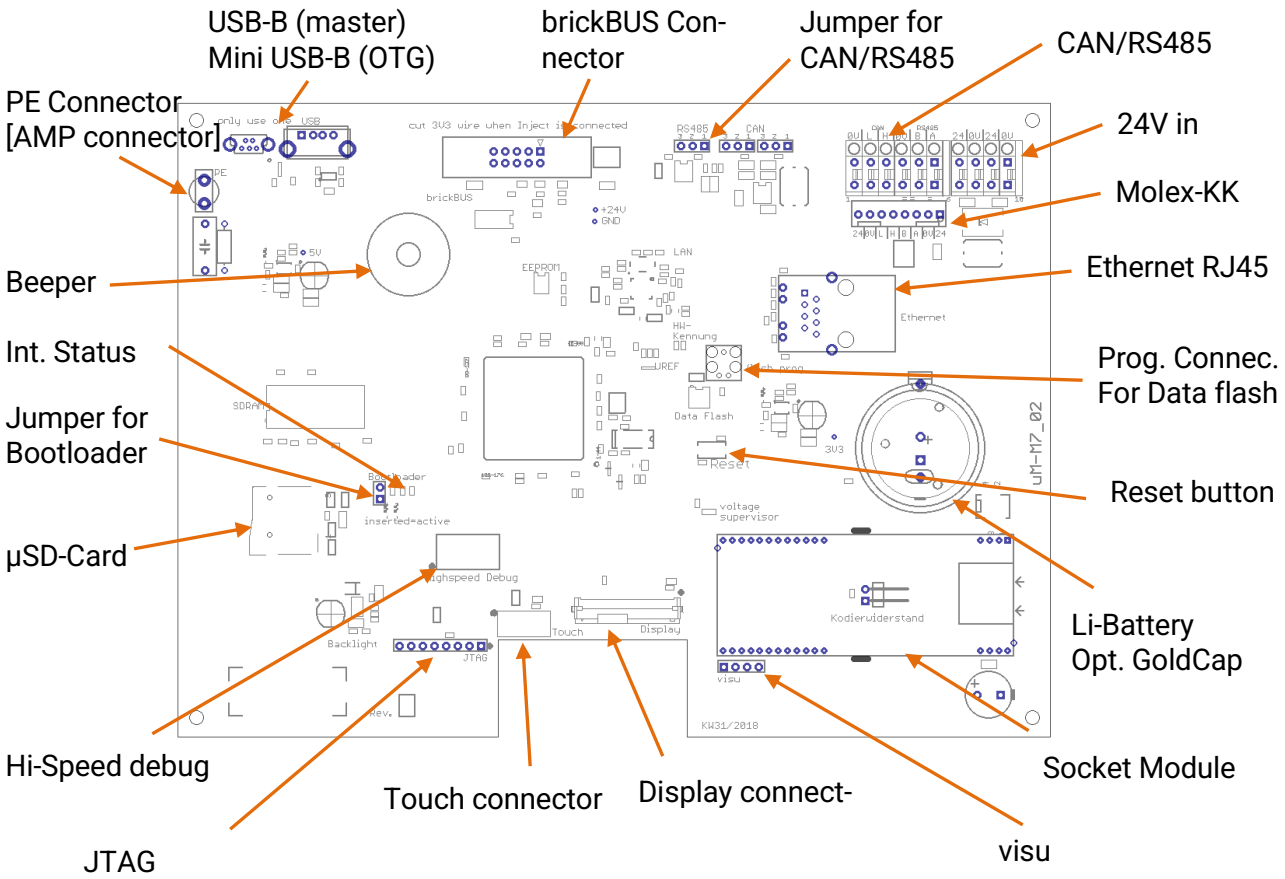

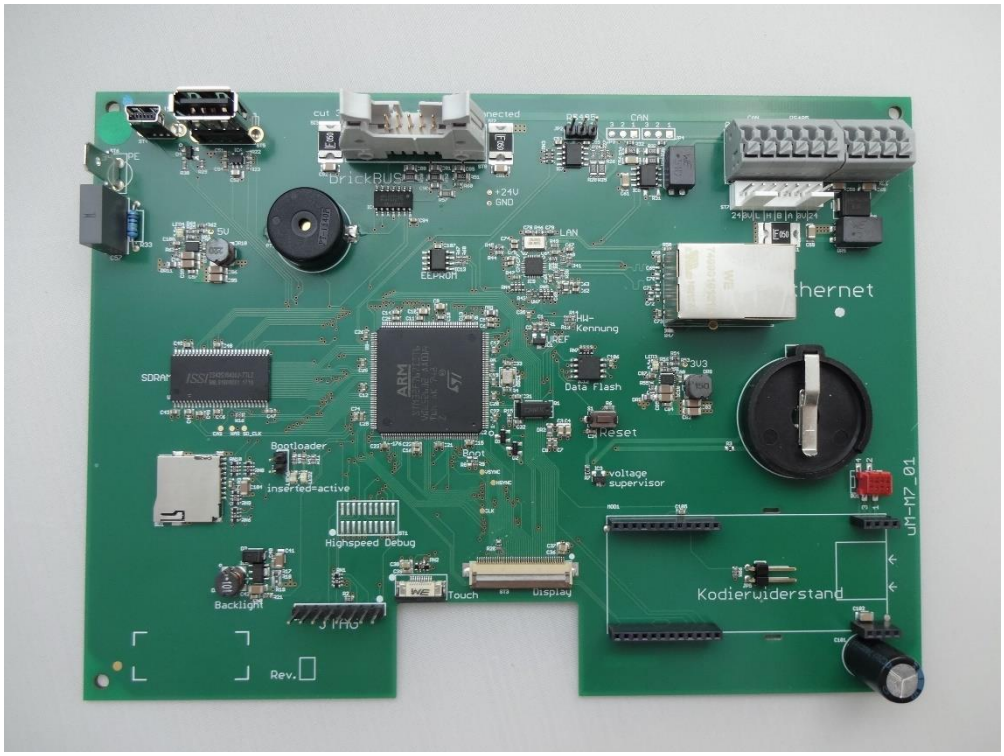

1.2.4.2 Picture

1.2.4.3 Technical Data

Input/Output:
Front LEDs ..... none
Back LEDs ..... red, green (for system use)
Inputs ..... none

Display types / HMI:
4.3”, 480*272, 24Bit, capacitive touch, no keys

General:
supply voltage..... 24 V DC ±10 % over CAN or brickBUS connector
output supply capability..... nominal: 0,3A@24V, 1A@3.3V
specials ..... none
RTC supply (power off) ..... Li-Battery, approx. 5 years
..... alternatively GoldCap, approx. 3 days

Mechanical specification:
dimensions (w)x(l)x(h): ..... 190 x 138 x 35 mm
weight ..... ca. 200 g

Communications ..... via COM-Modules (Socket-Module Connector)
RS232, RS422, RS485, LAN, WLAN, GPRS, BlueTooth, ProfiBus, ModBUS, ... others on request

1.2.4.4 Terminal Assignment

Circuit Example	Ident.	Term	Function	Usage	internal simplified diagram
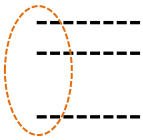	-	**ST7/1**	CAN/RS485	+24V	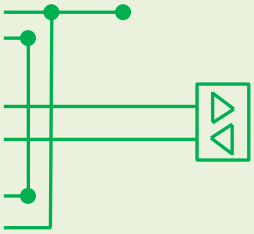
	-	**ST7/2**		GND	
	-	**ST7/3**		RS485-A	
	-	**ST7/4**		CAN-H	
	-	**ST7/5**		CAN-L	
	-	**ST7/6**		RS485-B	
	-	**ST7/7**		GND	
	-	**ST7/8**		+24V	
	1	**KL2/6**	CAN	GND	
	2	**KL2/5**		CAN-L	
	3	**KL2/4**		CAN-H	
	4	**KL2/3**	RS485	GND	
	5	**KL2/2**		RS485-B	
	6	**KL2/1**		RS485-A	
	7	**KL1/4**	Versorgung	+24V	
	8	**KL1/3**		GND	
	9	**KL1/2**		+24V	
	10	**KL1/1**		GND	

1.2.5 CBB_CPU-uniBRAIN-A8-0#

Local-Master for BB-Black/Green
.. CAN, RS485, RS232, LAN, USB-OTG
.. µSD-Card, Socket-Modem
.. RTC, EEPROM
.. 24V supply, brickBUS-Master
Optional:
.. back cover (IP20)
.. Touch-LCDs with Frame enclosure

Modul IDs	-			
Order No.	**CBB_CPU-uniBRAIN-A8-0#**			
Terminals	**push-in** (for ≤ 1.5mm²)			
Size	**196 x 100 mm**	BB_{FCP}	**5-1-1**	
Variants: 0# =	**01:** all interfaces, no options (1-571)			

1.2.5.1 Brief Description

The uniBRAIN-A8 is an universal, 24V driven industrial powerful CPU-base-board hosting the Beaglebone-CPUs with a Cortex-A8-Sitara, 1GHz, 4GB-Flash, 512MB-RAM

With different optional LCD front frame enclosures it becomes a compact front integration unit with a capacitive touch and 7", 10.4", 12.1" displays.

As a compact single board unit it offers: Ethernet, CAN, RS232, RS485, USB OTG, µSD-Card, separate EEPROM and a battery buffered RTC. Moreover it contains an emBRICK-Master-Port (10 pol.) to drive up to 10 emBRICK slave modules.

1.2.5.2 Connectors and Indication-/Operation- Elements

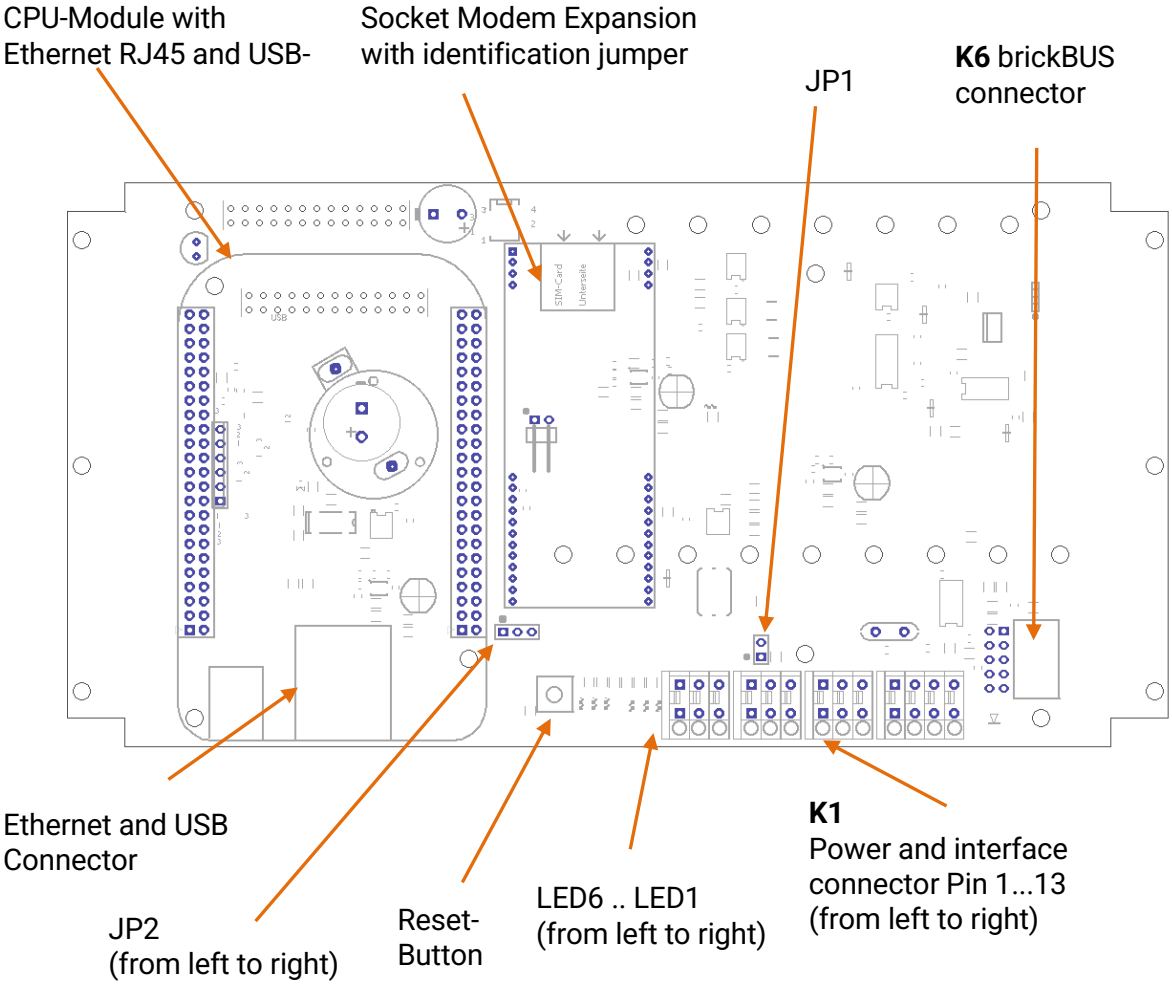

1.2.5.3 Terminal Assignment

Circuit Example	Ident.	Ter.	Function	Usage	internal simplified diagram
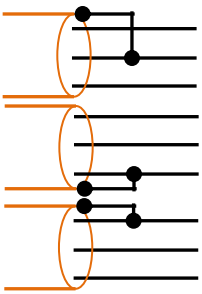					
	CANH	**K1/1**	CAN-Bus	CAN-H	
	GND	**K1/2**		GND	
	CANL	**K1/3**		CAN_L	
	A	**K1/4**	RS485	Line A	
	A	**K1/5**		Line B	
	GND	**K1/6**		GND	
	GND	**K1/7**	RS232	GND	
	TX	**K1/8**		TxD	
	RX	**K1/9**		RxD	
	24V	**K1/10**	Power Supply (incoming)	+24V	
	GND	**K1/11**		GND	
	24V	**K1/12**		+24V	
	GND	**K1/13**		GND	

1.2.5.4 LED Indications

LED1, green ..... BeagleBone Black P9 Pin42
LED2, orange ..... BeagleBone Black P9 Pin41
LED3, yellow ..... GPIO6 (used as *brickBUS®*-Select active output)
LED4, green ..... power supply for *brickBUS®* 3,3V
LED5, green ..... +5V output from BeagleBone Black P9 Pin7
LED6 green ..... power supply for BeagleBone Black 5V

1.2.5.5 Jumper functions

JP1..... termination resistor RS485
JP2..... *BBB console– 1=GND; 2=RX of BBB; 3=TX of BBB*

1.2.5.6 Technical Data

Core:
CPU..... Sitara (Cortex-A8, 1GHz)
Memory ..... 2 GB-Flash eMMC, 512 MB-DDR3-RAM, 32kB-EEPROM
OS ..... Linux, Debian

Input/Output:
Power LEDs..... 24V, 3V3 (yellow)
Status LEDs ..... green, orange, yellow (for system use)

Interfaces:
Data (low rate)..... RS232/485, CAN
Data (high rate)..... Ethernet 100MHz, USB 2.0
Display..... connector to RGB-LCD with Touch
Communications Modules ..... via COM-Modules (Socket-Modem Connector)
RS232, RS422, RS485, LAN, WLAN, GPRS, BlueTooth, ProfiBus, ModBUS, … others on request

General:
supply voltage..... 24 V DC ±10 %, via clamp
own current consumption ..... nominal: 200mA@24V
output supply capability..... nominal: 1A@24V, 1A@3.3V
specials ..... StarterKit variant available
RTC supply (power off) ..... Li-Battery, CR2130, approx. 5 years (alternatively: SuperCap, approx. 5 days)

Mechanics:
Dimensions..... 196 x 100 x 25 mm (w)x(l)x(h)
Dimensions with frame LCD..... 229 x 203 x 40 mm (w)x(l)x(h) for Bocard 200
Terminals ..... cage clamp Wago series 250, 3.5mm
Connection..... usable with one litz wire from 0.5 – 1.5 mm²
weight ..... approx. 150 g

1.2.6 CBB_CPU-Idren-A8-0#

Local-Master for var. emtrion CPUs
.. CAN, RS485, RS232, LAN, USB-OTG
.. µSD-Card, miniPCIe (with SIM-Card slot)
.. 24V supply, external bricks
Optional:
.. back cover (IP20)
.. Touch-LCDs with Frame enclosures

Modul IDs	**1-572**		
Order No.	**CBB_CPU-Idren-A8-0#**		
Terminals	**push-in** (for ≤ 1.5mm²)		
Size	**196x100 mm**	BB_{FCP}	**5-1-1**
Variants: 0# =	**01:** with all interfaces (1-572)		

1.2.6.1 Brief Description

The CPU-Idren-A8 is an universal, 24V driven industrial powerful CPU-base-board hosting for several emtrion® CPU-DIMM-modules.

With different optional LCD front frame enclosures it becomes a compact front integration unit with a capacitive touch and 7", 10.4", 12.1" displays.

As a compact single board unit it offers: Ethernet, CAN, RS232, RS485, USB OTG, µSD-Card, mini-PCIe and a battery buffered RTC. Moreover it contains an emBRICK-Master-Port (10 pol.) to drive up to 10 emBRICK slave modules.

1.2.6.2 Product Picture

(board itself, here with an optional CAD_TiaBoc200-70C-01 LCD-frame unit)

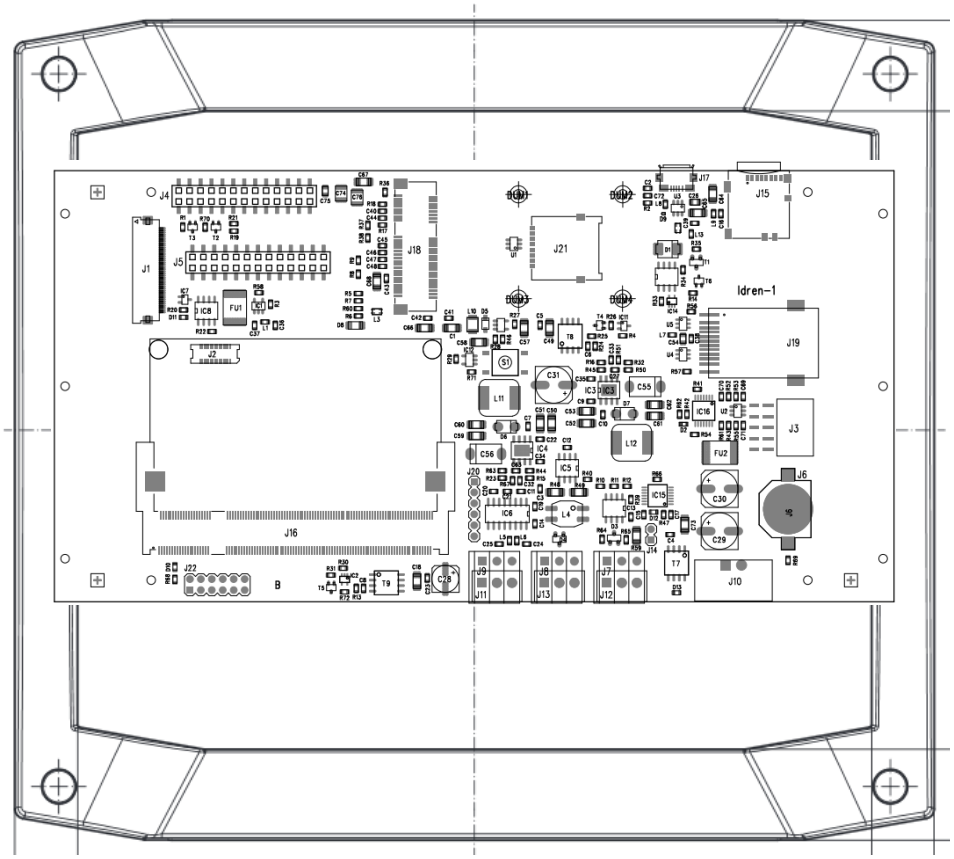

1. Connectors and Indication-/Operation- Elements

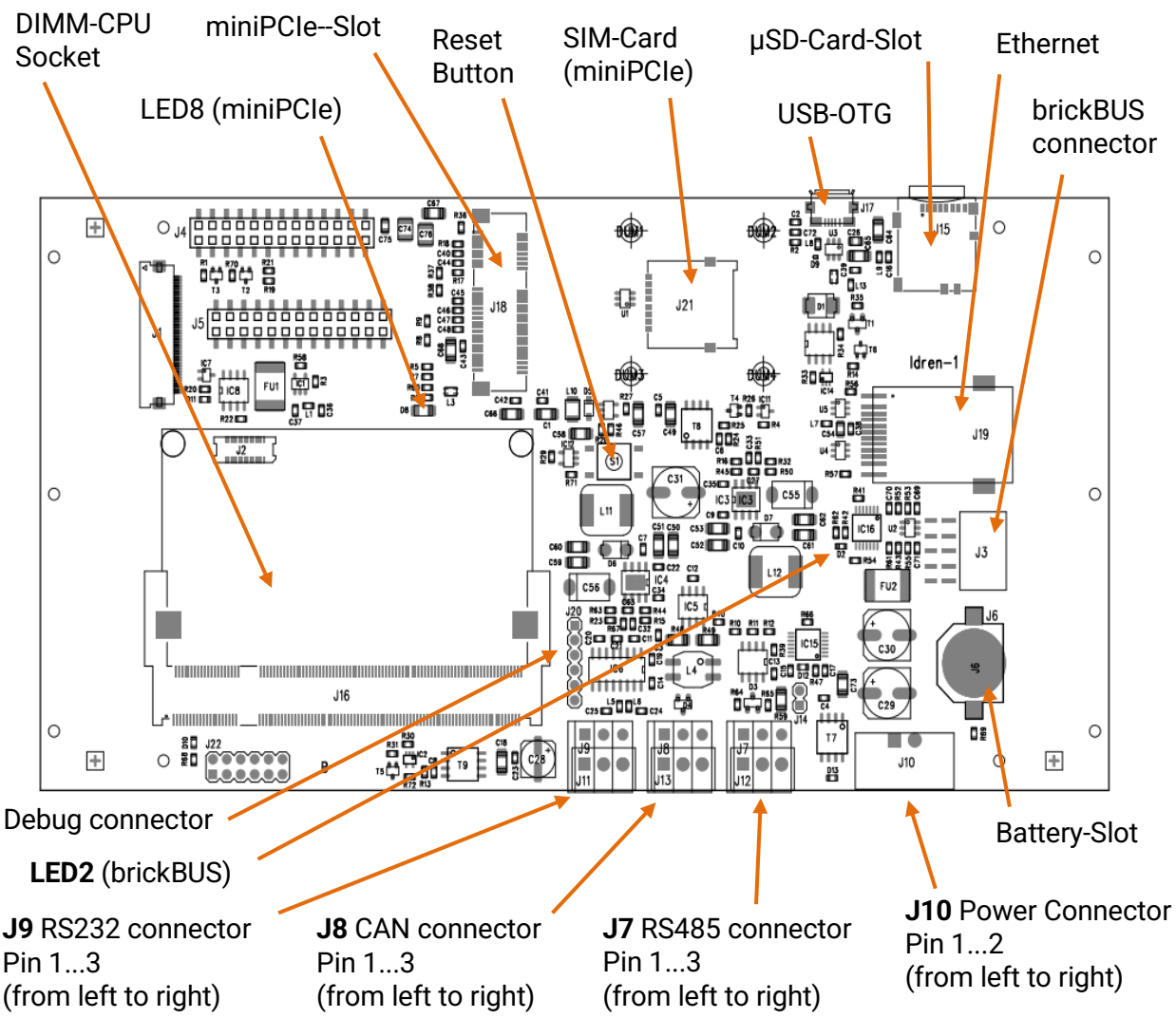

2. Terminal Assignment

Circuit Example	Ident.	Ter.	Function	Usage	internal simplified diagram
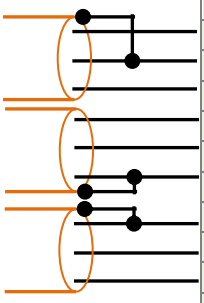	CANH	**J8/3**	CAN-Bus	CAN-H	
	GND	**J8/2**		GND	
	CANL	**J8/1**		CAN_L	
	A	**J7/1**	RS485	Line A	
	B	**J7/2**		Line B	
	GND	**J7/3**		GND	
	GND	**J9/1**	RS232	GND	
	TX	**J9/2**		TxD	
	RX	**J9/3**		RxD	
	24V	**J10/1**	Power Supply (incoming)	+24V	
	GND	**J10/2**		GND	

3. Technical Data

Input/Output:
brickBUS LED ..... yellow (LED2)
miniPCI LED ..... green (LED8)

Interfaces:
Data (low rate) ..... RS232, 485, CAN
Data (high rate)..... Ethernet 100MHz, USB-OTG
miniPCIe (with coupled SIM-card-socket)

General:
supply voltage..... 24 V DC ±10 %, via clamp
own current consumption ..... nominal: 200mA@24V
brickBUS supply capability ..... nominal: 1A@24V, 1A@3.3V
specials ..... StarterKit variant available
RTC supply (power off) ..... Li-Battery, CR1225, approx. 5 years

Mechanics:
Dimensions ..... 196 x 100 x 25 mm (w)x(l)x(h)
Dimensions with frame LCD..... 229 x 203 x 40 mm (w)x(l)x(h)
Terminals ..... cage clamp Wago series 250, 3.5mm
Connection..... usable with one litz wire from 0.5 – 1.5 mm²
weight ..... approx. 150 g

1.3 Coupler for Remote-Master

These devices couple a brickBUS string via a remote bus (e.g. Ethernet, CAN, serial) to a remote master. The coupling device does not have an own functionality and acts as bridge.

1.3.1 CAE_Z-CouplingBrick-0#

Bus Coupler, *Local-Master*
Remote Coupling Unit for
.. TCP/IP (via LAN/WLAN)
.. CAN (via CAN2.0)
.. Serial (via RS485, RS232)
.. Bluetooth (optional)

Modul IDs	**1-601, 1-602, 1-603, 1-604**		
Order No.	**Z-CouplingBrick-0#**		
Terminals	**push-in** (for ≤ 0.5mm²)		
Size	**9 eU** (99mm x 72mm)	BB_{FCP}	**1-1-1**
Variants: 0# =	**01:** full amount (1-601) **02:** no WLAN (1-602) **03:** no WLAN, no CAN, no RSxx (1-603) **04:** no WLAN, no LAN (1-604)		

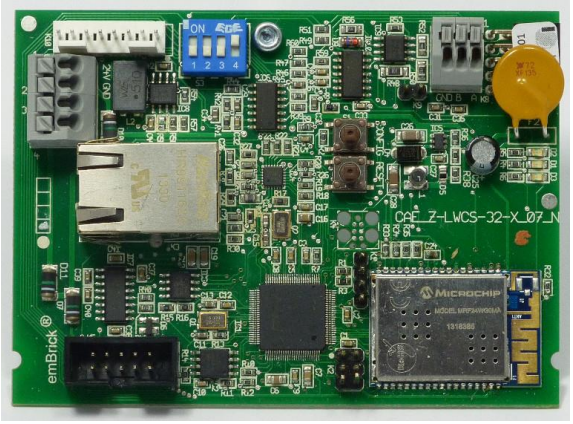

1.3.1.1 Brief Description

The CouplingBrick is a connection device between an emBRICK Remote Bus and a Local Bus. Therefore itself acts as a "non intelligent" *remote bus slave* and a *local bus master* and connects e.g a PC with a *string* of the *brickBUS®* slaves modules.

The largest variant contains the interfaces LAN, WLAN, CAN and Serial which can be used to couple a *remote-master*. It is also possible to use the CAN and RSxxx as an IO-device (on request). Furthermore it supports the possibility of a Bluetooth Master/Slave with an additional plug-in module.

The unit is driven by 24Vdc and also serves as power-supply unit that delivers 3.3V and 24V for the slave modules. Nevertheless the bus is controlled by the connected *remote-master*. The LWCS acts as the bus master of the local bus and the connected slaves modules. Therefore the LWCS has the ability to control its *string* in exceptional situations autarkic, e.g. by putting a teached output pattern on the bus when the *remote-master* communication breaks down.

Away from this, the board can also act as a low cost/low power IoT-Interface adapter that supports the connection between local control units (RSxxx, TTL, CAN) and the WAN/Internet and also as an standalone bus master.

1.3.1.2 Connectors and Indication-/ Operation-Elements

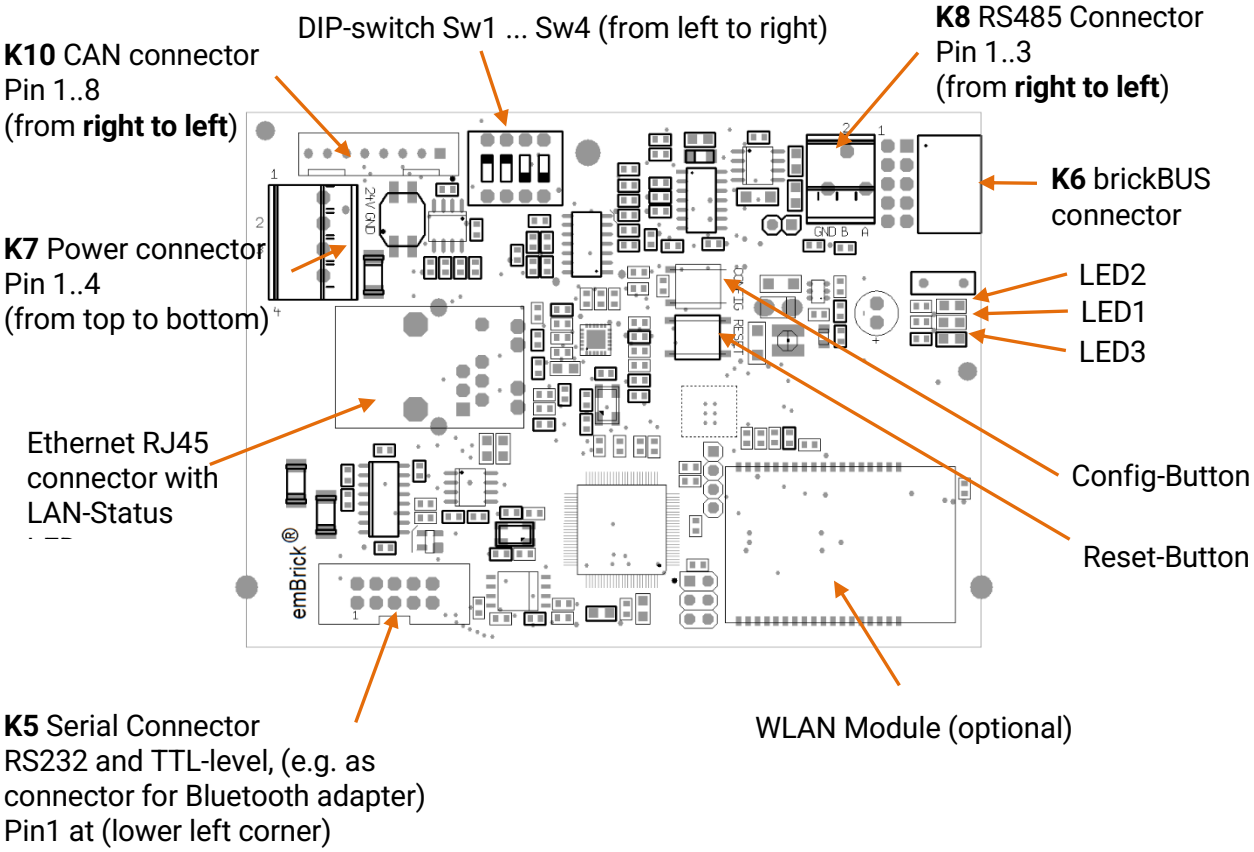

1.3.1.3 Terminal Assignment

Circuit Example	Ident.	Term	Function	Usage
	1	**K7/1**	Power Supply	+24V in
	2	**K7/2**		GND
	3	**K7/3**		+24V in
	4	**K7/4**		GND
	1	**K8/1**	Serial A RS485	RS485-A
	2	**K8/2**		RS485-B
	3	**K8/3**		GND
	1	**K10/1**	CAN	+24V out
	-	**K10/2**		GND
	-	**K10/3**		n.c.
	-	**K10/4**		CAN-H
	-	**K10/5**		CAN-L
	-	**K10/6**		n.c.
	-	**K10/7**		GND
	-	**K10/8**		+24V out
	1	**K5/1**	Serial B RS232 and TTL	+3.45V out
	-	**K5/2**		+24V out
	-	**K5/3**		RxD (RS232)
	-	**K5/4**		TxD (RS232)
	-	**K5/5**		GND
	-	**K5/6**		GND
	-	**K5/7**		RxD (TTL)
	-	**K5/8**		TxD (TTL)
	-	**K5/9**		+24V out
	-	**K5/10**		+3.45V out

internal simplified diagram

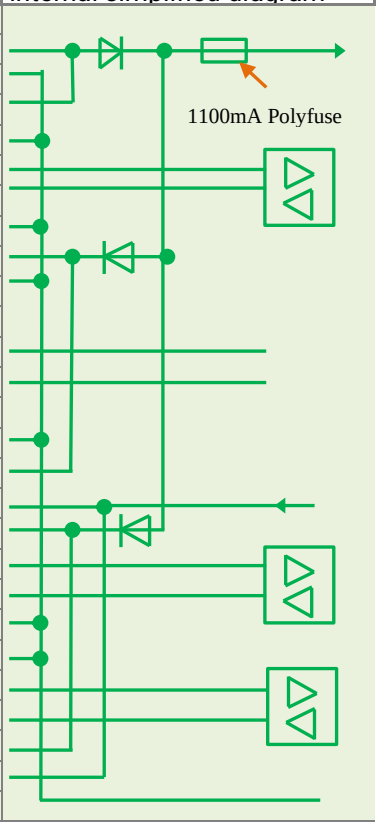

1.3.1.4 Modes / Functionality

The CouplingBridge offers multiple operation and communication methods and can be used in following different modes. The first 3 modes supports an integrated parallel working Web Server (via Port 80) for running configuration and diagnostics via a Web-Browser (under development).

1.3.1.4.1 Mode 1: Remote Bus Coupling Device (shipping version)

This mode offers a connection between *remote-bus* and *local-bus* and is therefore a *Local-Master* without own functionality. It contains the following different (alternative) operation sub modes. (for details about the communication see eB_Programmer-Manual):

- eB-Remote TCP	Ethernet/WLAN via Port 7086
- eB-Remote CAN	via CAN – planned
- eB-Remote RS485	via RS485 Half-Duplex (ModBUS Large Block)
- eB-Remote RS232	via RS232 Full-Duplex (ModBUS Large Block) – under development
- eB-Remote TCP	TCP/IP via Port 502 (ModBUS Large Block)
- Modbus TCP	Ethernet/WLAN via Port 502
- Modbus RTU	via RS485

More features supported in this mode:

- Parallel to this, a Bluetooth interface expansion allows to couple another Coupling Bridge running in the "Wireless Slave Sting" mode (see below) to append its Bricks to the main string – under development
- For the eB-Remote TCP communication and different common programming systems, ready-to-use drivers are available (MSVC++, Gamma). See => eB_Developer-Manual. For own/individual programming of connections to the CouplingBrick see eB_Developer-Manual.

1.3.1.4.2 Mode 2: Standalone Target

This offers an individual programming with C/C++ or radCASE model-based programing. For details send a request to support@embrick.com.

1.3.1.4.3 Mode 3: eWAC

This is the embedded web access mode and an expanded version of mode 2 with libraries / functionality that offers a TCP/IP-Slave to connect to cloud based Web Server. This mode also offers the full security package with TLS encryption. For details send a request to support@embrick.com.

1.3.1.4.4 Mode 4: Standalone Target (for own Development with MPLAB and radCASE®)

The hardware of the CouplingBridge supports also an individual programming using the existing environment and libraries. For details send a request to support@embrick.com

1.3.1.5 Software Configuration

The Software can be configured using either the PC-Visualization or the Web Visualization.
For details see eB_Programmer manual chapter 6.

1.3.1.6 Technical Data

Inputs/Outputs:
Supply..... 24Vdc
Ethernet..... 10/100MBit, 1kV islolated, RJ45
CAN ..... 2.0B, max. 1MBit, Molex-KK
RS485..... max. 1 MBit, not isolated, cage clamps
RS232..... max. 115 kBit, not isolated, pin connector

General:
own power supply
  for emBRICK usage ..... 24 Vdc, ±10 %, via K7
  for general usage..... 12…24 Vdc, ±10 %, via K7
supply current
  own, with LAN..... approx. 43mA@24V
  own, with WLAN..... approx. 105mA@24V
  with external loads ..... <1.0 A
output supply capability..... nominal: 0,75A@24V, 0,5A@3.3V
Status indication ..... via 3 status LEDs

Mechanical Data:
Size (WxHxD) ..... 121 x 72 x 20 mm
Wight ..... approx. 60 g
Terminals ..... cage clamp Wago250, RJ45, Molex KK

brickBUS:
Supported speed level BBS1

1.3.2 CAE_Z-PatBridgeMX-1#

Bus Coupler, Local-Master
Remote Coupling Unit for…
.. TCP/IP (via LAN)
.. CAN (via CAN2.0)
.. Serial (via RS485)

Modul IDs	**1-61#**		
Order No.	**Z-PatBridgeMX-11 RB**		
Terminals	**push-in** (for ≤ 1.5mm²)		
Size	**66 x 72 mm**	BB$_{FCP}$	**1-1-1**
Variants: 0# =	**11:** with all features (1-611) **12:** only LAN (1-612)		

1.3.2.1 Brief Description

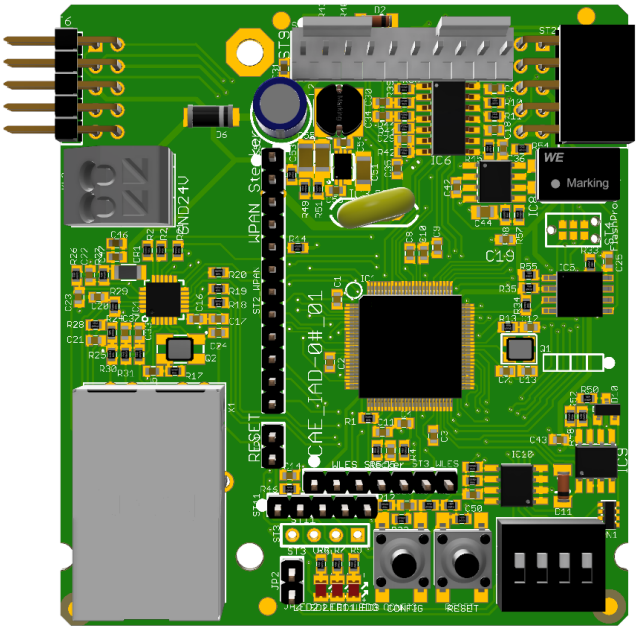

The PatBrigdeMX is a coupling mode between an emBRICK Remote Bus and a Local Bus. Here it acts as a "non intelligent" *remote bus slave* and a *local bus master* and connects e.g. a PC with a *string* of the *brickBUS®* slaves modules.

The largest variante (1-611) contains the interfaces LAN, CAN and Serial (RS485) which can be used to couple a *remote-master*. It is also possible to use the CAN and RS485 as an IO-device (on request).

The unit is driven by 24VDC (nominal) and also serves as power-supply unit that delivers 3.3V and 24V for the slave modules. Nevertheless, the bus is controlled by the connected *remote-master.* The PatBrigdeMX acts as the bus master of the local bus and the connected slaves modules. Therefore, it has the ability to control its *string* in exceptional situations autarkic e.g. with a teached output pattern.

Away from the coupling mode, the board can furthermore act as a low cost/low power I4.0/IoT-Interface adapter that supports the connection between local control units (RS485, TTL, CAN) and the WAN/Internet and also as a standalone bus master.

1.3.2.2 Connectors and Indication-/Operation-Elements

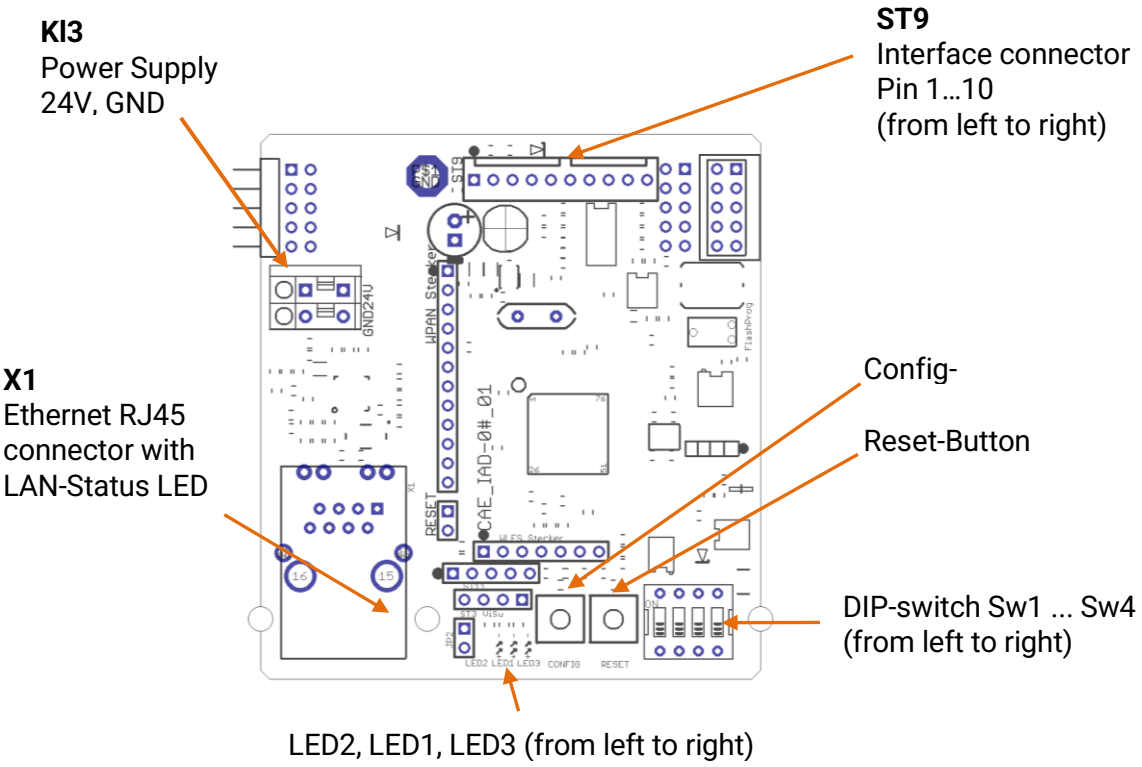

1.3.2.3 Terminal Assignment

Circuit Example	Ident.	Ter.	Function	Usage	internal simplified diagram
	24V	**K13/1**	Power Supply (Incoming)	+24V	
	GND	**K13/2**		GND	
	3,45V	**ST9/1**	Power Supply		
	GND	**ST9/2**			
	TX	**ST9/3**	UART	UART TX	
	RX	**ST9/4**		UART RX	
	A	**ST9/5**	RS485	Line A	
	B	**ST9/6**		Line B	
	CANH	**ST9/7**	CAN		
	CANL	**ST9/8**			
	GND	**ST9/9**	Power Supply	GND	
	24V	**ST9/10**		+24V	

1.3.2.4 Modes / Functionality

The PatBridgeMX offers multiple operation and communication methods and can be used in following different modes. The first 3 modes supports an integrated parallel working Web Server (via Port 80) for running configuration and diagnostics via a Web-Browser (under development).

1.3.2.4.1 Mode 1: Remote Bus Coupling Device (shipping version)

This mode offers a connection between *remote-bus* and *local-bus* and is therefore a *Local-Master* without own functionality. It contains the following different (alternative) operation sub modes. (for details about the communication see eB_Programmer-Manual):

- eB-Remote TCP	Ethernet via Port 7086
- eB-Remote CAN	via CAN – planned
- eB-Remote RS485	via RS485 Half-Duplex
- Modbus TCP	Ethernet via Port 502
- Modbus RTU	via RS485

Currently different Software packages must be installed for the different modes. It is planned to integrate all modes into one Software package.

More features supported in this mode:

- Parallel to this, a Bluetooth interface expansion allows to couple another Coupling Bridge running in the "Wireless Slave Sting" mode (see below) to append its Bricks to the main string – under development
- For the eB-Remote TCP communication and different common programming systems, ready-to-use drivers are available (MSVC++, Gamma). See => eB_Developer-Manual. For own/individual programming of connections to the CouplingBrick see eB_Developer-Manual.

1.3.2.4.2 Mode 2: Standalone Target

This offers an individual programming with C/C++ or radCASE model-based programing. For details send a request to support@embrick.com.

1.3.2.4.3 Mode 3: eWAC

This is the embedded web access mode and an expanded version of mode 2 with libraries / functionality that offers a TCP/IP-Slave to connect to cloud based Web Server. This mode also offers the full security package with TLS encryption. For details send a request to support@embrick.com.

1.3.2.4.4 Mode 4: Standalone Target (for own Development with MPLAB and radCASE®)

The hardware of the CouplingBridge supports also an individual programming using the existing environment and libraries. For details send a request to support@embrick.com

1.3.2.5 Software Configuration

The Software can be configured using either the PC-Visualization or the Web Visualization.
For details see eB_Programmer manual chapter 6.

1.3.2.6 Technical Data

Inputs/Outputs:
Supply..... 24VDC
Ethernet..... 10/100MBit, 1kV islolated, RJ45
CAN ..... 2.0B, max. 1MBit, cage clamps
RS485..... max. 1 MBit, not isolated, cage clamps
RS232..... max. 115 kBit, not isolated, cage clamps
Status LEDs ..... LED2 green, LED1 orange, LED3 yellow (for system use)

Interfaces:
Data (low rate)..... RS485, CAN
Data (high rate)..... Ethernet 100MHz

General:
supply voltage..... 24 V DC ±10 %, via clamp
own current consumption ..... nominal: 100mA@24V
output supply capability..... nominal: 1A@24V, 0.5A@3.3V
specials..... StarterKit available

Mechanics:
Terminals..... 2 cage clamp Wago series 250, 3.5mm
Connection..... usable with one litz wire from 0.5 – 1.5 mm²
Dimensions ..... 66 x 72 mm
Weight ..... approx. 130g

1.3.2.7 Application Note

In addition to the hints in chapter 4, the following hints will be applied:

- The Z-PatBridgeMX can be expanded internal with optional COM-Modules to act as a Main-Master or a Sub-Master.

1.3.2.8 Optional COM-Modules

For details send a request to support@embrick.com.

1.3.3 CAE_Z-UniBridgeMX-1#-RB

Bus Coupler, Local-Master
Remote Coupling Unit for…
.. TCP/IP (via LAN)
.. CAN (via CAN2.0)
.. Serial (via RS485, RS232)

Modul IDs	**1-61#**		
Order No.	**Z-UniBridgeMX-1# RB**		
Terminals	**push-in** (for ≤ 1.5mm²)		
Size	**72 x 90 (96) mm**	BB_{FCP}	**2-1-1**
Variants: 0# =	**13:** with all features (1-613) **14:** only LAN (1-614)		

1.3.3.1 Brief Description

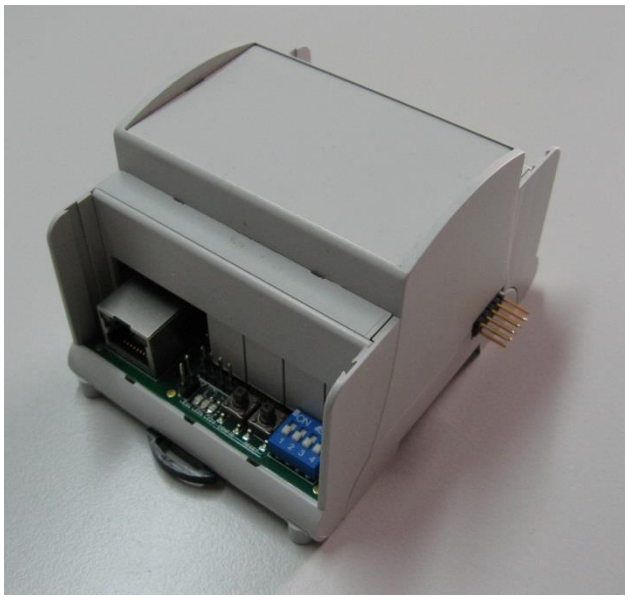

The UniBrigdeMX is a coupling mode between an emBRICK Remote Bus and a Local Bus. Here it acts as a "non intelligent" *remote bus slave* and a *local bus master* and connects e.g. a PC with a *string* of the *brickBUS®* slaves modules.

The largest variant (1-613) contains the interfaces LAN, CAN and Serial (RS232 and RS485) which can be used to couple a *remote-master*. It is also possible to use the CAN and RSxxx as an IO-device (on request).

The unit is driven by 24Vdc (nominal) and also serves as power-supply unit that delivers 3.3V and 24V for the slave modules. Nevertheless the bus is controlled by the connected *remote-master*. The UniBrigdeMX acts as the bus master of the local bus and the connected slaves modules. Therefore it has the ability to control its *string* in exceptional situations autarkic e.g. with a teached output pattern.

Away from the coupling mode, the board can furthermore act as a low cost/low power I4.0/IoT-Interface adapter that supports the connection between local control units (RSxxx, TTL, CAN) and the WAN/Internet and also as a standalone bus master.

1.3.3.2 Connectors and Indication-/Operation-Elements

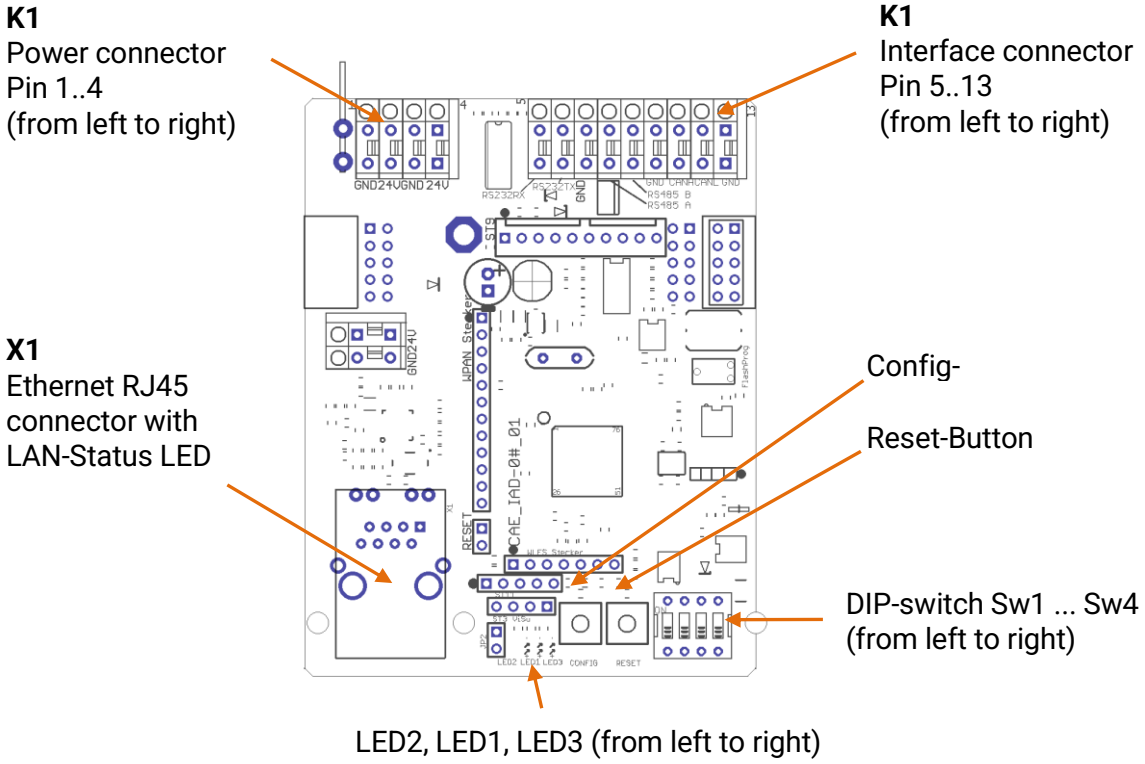

1.3.3.3 Terminal Assignment

Circuit Example	Ident.	Ter.	Function	Usage	internal simplified diagram
	GND	**K1/1**	Power Supply (incoming)	GND	
	24V	**K1/2**		+24V	
	GND	**K1/3**		GND	
	24V	**K1/4**		+24V	
	RX	**K1/5**	RS232	Send Data	
	TXD	**K1/6**		Receive Data	
	GND	**K1/7**		GND	
	A	**K1/8**	RS485	Line A	
	B	**K1/9**		Line B	
	GND	**K1/10**		GND	
	CANH	**K1/11**	CAN		
	CANL	**K1/12**			
	GND	**K1/13**		GND	

1.3.3.4 Modes / Functionality

The UniBrigdeMX offers multiple operation and communication methods and can be used in following different modes. The first 3 modes supports an integrated parallel working Web Server (via Port 80) for running configuration and diagnostics via a Web-Browser (under development).

1.3.3.4.1 Mode 1: Remote Bus Coupling Device (shipping version)

This mode offers a connection between *remote-bus* and *local-bus* and is therefore a *Local-Master* without own functionality. It contains the following different (alternative) operation sub modes. (for details about the communication see eB_Programmer-Manual):

- eB-Remote TCP	Ethernet via Port 7086
- eB-Remote CAN	via CAN – planned
- eB-Remote RS485	via RS485 Half-Duplex (ModBUS Large Block)
- eB-Remote RS232	via RS232 Full-Duplex (ModBUS Large Block)
- Modbus TCP	Ethernet via Port 502
- Modbus RTU	via RS485

More features supported in this mode:

- Parallel to this, a Bluetooth interface expansion allows to couple another Coupling Bridge running in the "Wireless Slave Sting" mode (see below) to append its Bricks to the main string – under development
- For the eB-Remote TCP communication and different common programming systems, ready-to-use drivers are available (MSVC++, Gamma). See => eB_Developer-Manual. For own/individual programming of connections to the CouplingBrick see eB_Developer-Manual.

1.3.3.4.2 Mode 2: Standalone Target

This offers an individual programming with C/C++ or radCASE model-based programing. For details send a request to support@embrick.com.

1.3.3.4.3 Mode 3: eWAC

This is the embedded web access mode and an expanded version of mode 2 with libraries / functionality that offers a TCP/IP-Slave to connect to cloud based Web Server. This mode also offers the full security package with TLS encryption. For details send a request to support@embrick.com.

1.3.3.4.4 Mode 4: Standalone Target (for own Development with MPLAB and radCASE®)

The hardware of the UniBrigdeMX supports also an individual programming using the existing environment and libraries. For details send a request to support@embrick.com

1.3.3.5 Software Configuration

The Software can be configured using either the PC-Visualization or the Web Visualization.
For details see eB_Programmer manual chapter 6.

1.3.3.6 Technical Data

Inputs/Outputs:
Supply..... 24Vdc
Ethernet..... 10/100MBit, 1kV islolated, RJ45
CAN ..... 2.0B, max. 1MBit, cage clamps
RS485..... max. 1 MBit, not isolated, cage clamps
RS232..... max. 115 kBit, not isolated, cage clamps
Status LEDs ..... LED2 green, LED1 orange, LED3 yellow (for system use)

Interfaces:
Data (low rate)..... RS232/485, CAN (optional)
Data (high rate)..... Ethernet 100MHz (optional)
Communications Modules ..... optional via COM-Modules (Socket-Modem Connector)
WLAN, GPRS, BlueTooth-LE, Z-Wave, enOCEAN

General:
supply voltage..... 24 V DC ±10 %, via clamp
own current consumption ..... nominal: 100mA@24V
output supply capability..... nominal: 1A@24V, 0.5A@3.3V
specials..... StarterKit available

Mechanics:
Terminals..... 16 + 16 cage clamp Wago series 250, 3.5mm
Connection..... usable with one litz wire from 0.5 – 1.5 mm²
Dimensions ..... 72 x 96 x 63 mm
Weight ..... approx. 130g

1.3.3.7 Application Note

In addition to the hints in chapter 4, the following hints will be applied:

- The Z-UniBridgeMX can be expanded internal with optional COM-Modules to act as a Main-Master or a Sub-Master.

1.3.3.8 Optional COM-Modules

For details send a request to support@embrick.com.

1.3.4 CAE_Z-AirBridgeMX-1#

prospective

1.3.5 Coupler to KNX

prospective

1.3.6 Coupler to EtherCAT

prospective

1.3.7 Coupler to Profibus/Profinet

prospective

1.4 Adaption Masters

These devices use 3rd party processor modules (i.e. brickBUS).
Adaption masters are also independant *local-masters* therefore they service the *string*.

1.4.1 CAE_Z-RaspberryBrick-## (for Raspberry Pi)

Bus Coupler, *Local-Master*
Remote Coupling Unit for
.. LAN (via Ethernet)
.. Serial (via RS485 or RS232)
.. USB, SD Card
.. Display (via HDMI, USB-Touch)
.. RTC, EEPROM

Modul ID	**1-701, 1-702**		
Order No.	**Z-RasberryBrick-0#**		
Termianls			
Size	**9 eU** (99mm x 72mm)	BB_{FCP}	**1-1-1**
Variants: 0# =	**01:** full amount (1-701) **02:** no: serial, RTC, EEPROM (1-702)		

1.4.1.1 Description

It is an adaption board for the Raspberry-Pi (different models) which becomes an important education tool and semi-professional industrial platform for many measure and control applications. By keeping the standard brick sizes, it is possible to use this board in all given mounting types.

The unit is driven by 24Vdc and also serves as power-supply unit that delivers 3.3V and 24V for the slave modules. The LSUH acts as an self-sufficient *local-master* and does the logical control of the connected slave modules.

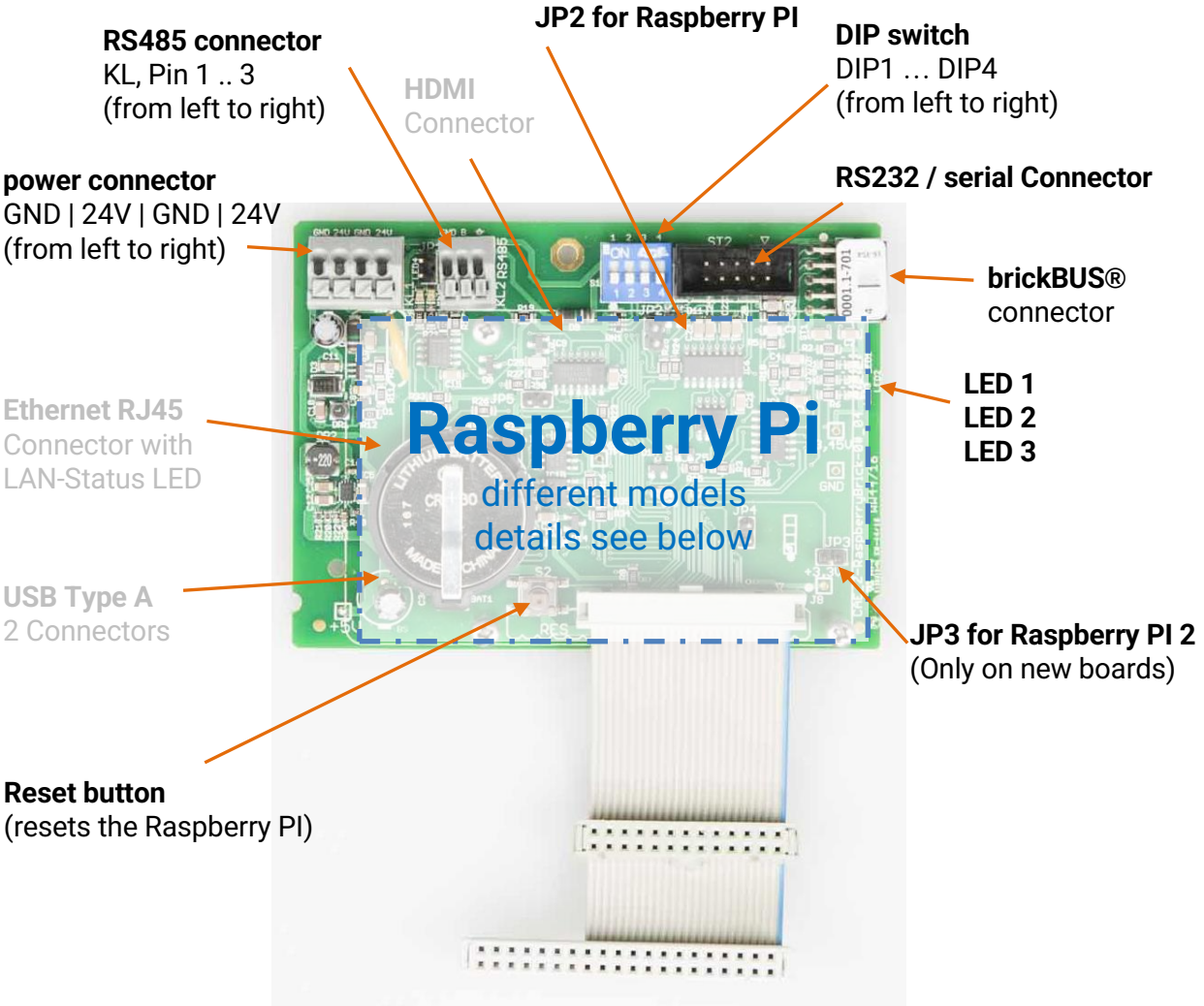

All grey comments are Raspberry Pi standard interfaces / functions.

1.4.1.2 Terminal Assignment

Beside the standard interfaces/connectors of the Raspberry Pi and the brickBUS® connector, this adaption board supports the following additional connectors:

Circuit Example	Ident.	Term	Function	Usage	internal simplified diagram
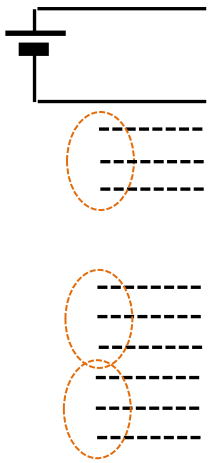	1	**K7/1**	Power Supply	+24V in	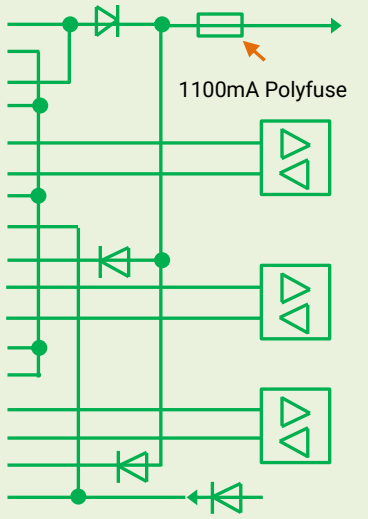
	2	**K7/2**		GND	
	3	**K7/3**		+24V in	
	4	**K7/4**		GND	
	1	**K8/1**	Serial A RS485	RS485-A	
	2	**K8/2**		RS485-B	
	3	**K8/3**		GND	
	1	**K5/1**	Serial B RS232 and TTL	+3.45V out	
	-	**K5/2**		+24V out	
	-	**K5/3**		RxD (RS232)	
	-	**K5/4**		TxD (RS232)	
	-	**K5/5**		GND	
	-	**K5/6**		GND	
	-	**K5/7**		RxD (TTL)	
	-	**K5/8**		TxD (TTL)	
	-	**K5/9**		+24V out	
	-	**K5/10**		+3.45V out	

1.4.1.3 LED Indications

LED1, orange GPIO4
LED2, green GPIO5
LED3, yellow ..... GPIO6 (used as *brickBUS®*-Select active output)

1.4.1.4 Adapting the different Raspberry Pi models

To support the connection to different Raspberry Pi models, the flat ribbon cable contains a 26 pin and a 40 pin head row connector (here only the 26 "basic pins" are used).

In combination with the original Raspberry Pi **(Model of 2011.12)**, use the 26 pin connector. The 40 pin connector is left open. Thereby also the stud bolts have to be changed.

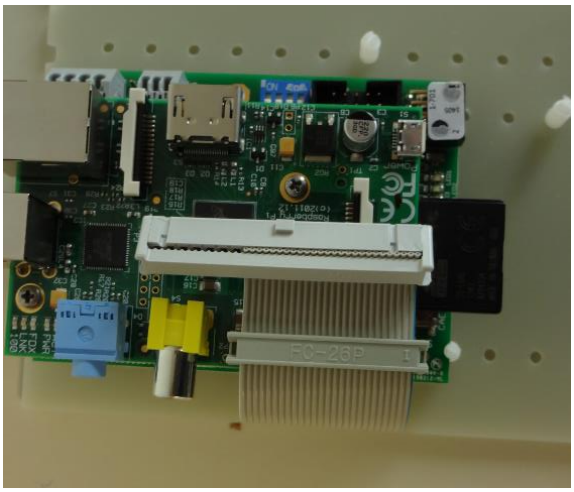

When using model *Raspberry Pi* ***Model B+ V1.2***, *Raspberry Pi* ***2 Model B V1.1*** or *Raspberry Pi* ***3 (+) Model B V1.2***, use the 40 pin connector (the 26 pin head row connector is unused)

1.4.1.5 Adapting the reset connector

The existing Raspberry Pi models also offer inside a 2 pad reset-connector. Unfortunately they have different positions for the different models.

To adapt them (not necessary), the shipment of the Z-RaspberryBrick contains a 2 pin female connector, that can be solder on the predefined position of the Raspberry Pi.

JP2 have to be used for the original Raspberry Pi **(Model of 2011.12)**

JP3 have to be used for the *Raspberry Pi* ***Model B+ V1.2*** *and* ***2 Model B V1.1***

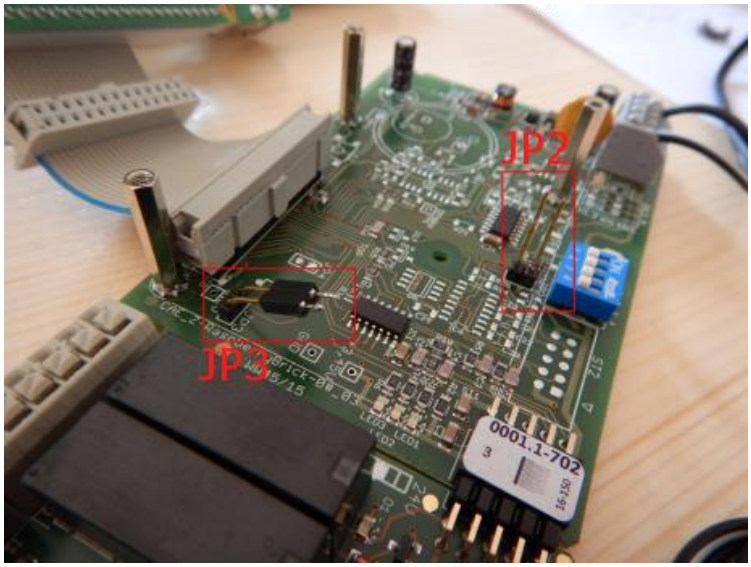

For the Raspberry Pi ***3 Model B V1.2***, there is no predefined jumper available. In this case you have to connect

Pin 1 (rectangle pad) of the RUN Jumper of the Raspberry Pi

with the

Pin1 (rectangle pad) if JP2/JP3 of the Z-RaspberryBrick

by a wire.

1.4.1.6 Internal IO-Assigment to Raspberry PI

Ports on adapter board			Ports/Pins on Raspberry Pi		
Interface / Port	needs …	note	Con.	Pin	Pin usage / description
emBRICK	CLK MOSI MISO SEL		J8 J8 J8 J8	23 19 21 22	
Serial A RS485	TXD RXD DIR	alternative usage with serial B jumper necessary	J8 J8 J8	8 10 7	 High = transmition enable
Serial B RS232	TXD RXD	alternative usage with serial A	J8 J8	8 10	
I2C for: - RTC - EEPROM	I2CAdress: 6Fh 50h		J8 J8	3 5	SDA SCL
DIP switch 1 2 3 4			 J8 J8 J8 J8	 11 12 13 15	
Status-LED - orange - green			 J8 J8	 16 18	 High = LED on High = LED on

1.4.1.7 Application Note

In addition to the notes in chapter 4, please regard the following:

- The different 0V and +24V terminals are connected internal. By using them the module can pass the supply on to another module.

1.4.2 CAE_Z-RaspberryBrick-1#-RB (for Raspberry Pi 3 / 3 B+)

Bus Coupler, *Local-Master*
Remote Coupling Unit for
.. LAN (via Ethernet)
.. Serial (via RS232)
.. Serial galvanic isolation (RS485, CAN)
.. USB, SD Card
.. Display (via HDMI, USB-Touch)
.. RTC, EEPROM

Modul ID	**1-703**		
Order No.	**Z-RasberryBrick-1#-RB**		
Terminals			
Size	**9 eU** (85mm x 65mm)	BB$_{FCP}$	**2-1-1**
Variants: 0# =	**10:** full amount (1-703)		

1.4.2.1 Description

It is an adaption board for the Raspberry-Pi which becomes an important education tool and semi-professional industrial platform for many measure and control applications. By keeping the standard brick sizes, it is possible to use this board in all given mounting types.

The unit is driven by 24Vdc and also serves as power-supply unit that delivers 3.45V and 24V for the slave modules. This brick acts as a combination of a remote and local master. Here is the Raspberry Pi the remote master and the PIC32 as a coupling brick (LWCS – remote master). The Pi and PIC communicates with ModBUS RTU over UART.

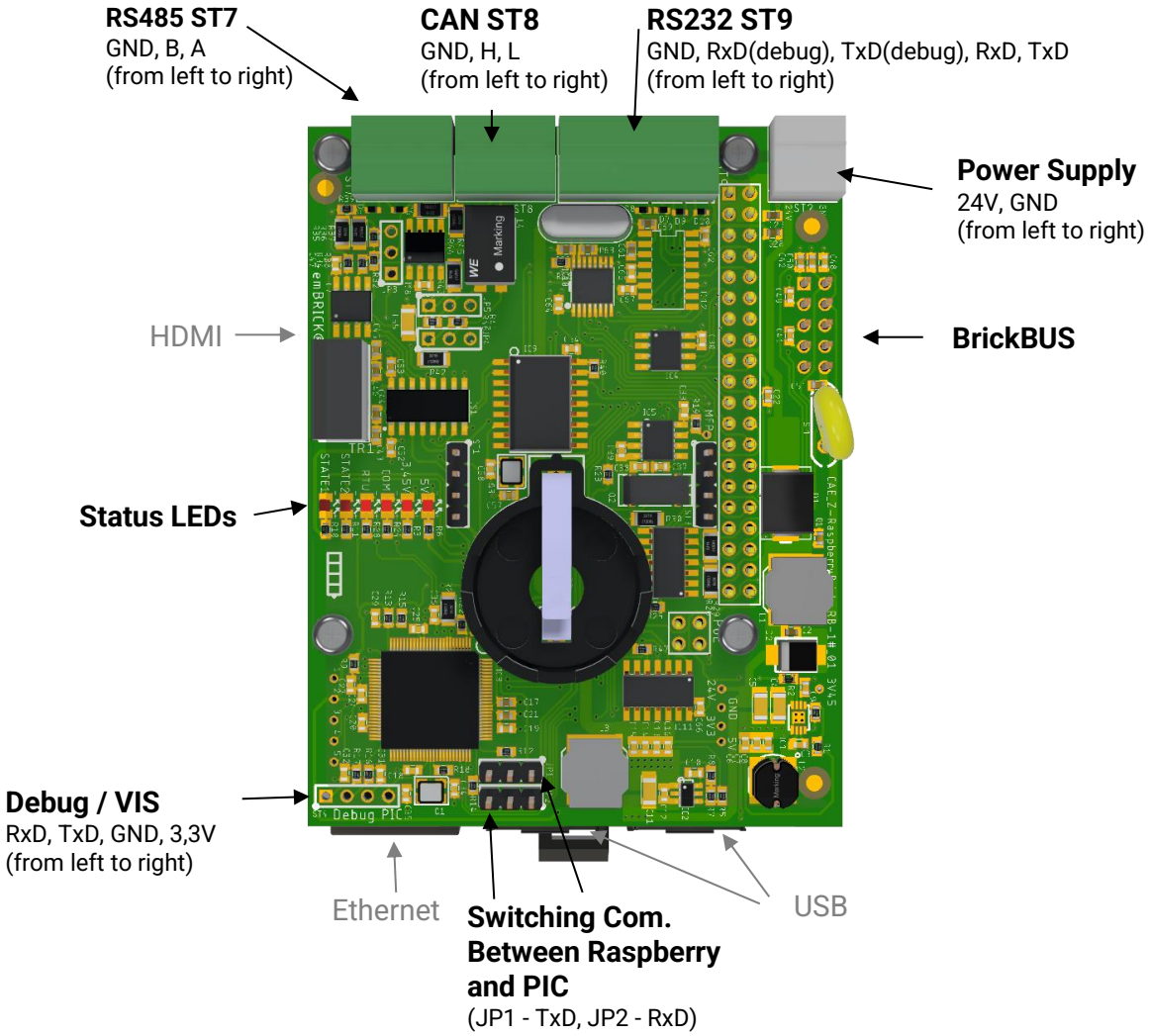

All grey comments are Raspberry Pi standard interfaces / functions.

1.4.2.2 Terminal Assignment

Beside the standard interfaces/connectors of the Raspberry Pi and the brickBUS® connector, this adaption board supports the following additional connectors:

Circuit Example	Ident.	Term	Function	Usage	internal simplified diagram
	2	**ST2/1**	Power Supply	+24V in	1100mA Polyfuse
	1	**ST2/2**		GND	
	7	**ST9/1**	Serial A RS232 (Debug)	GND	
	6	**ST9/2**		RxD	
	5	**ST9/3**		TxD	
	4	**ST9/4**	Serial B RS232	RxD	
	3	**ST9/5**		TxD	
	10	**ST8/1**	CAN	GND	
	9	**ST8/2**		CAN H	
	8	**ST8/3**		CAN L	
	13	**ST7/1**	Serial C RS485	GND	
	12	**ST7/2**		B	
	11	**ST7/3**		A	

1.4.2.3 LED Indications

LED1, yellow 5V
LED2, yellow 3,45V
LED3, green ..... *BrickBUS* communication
LED4, yellow ..... ModBUS RTU active
LED5, yellow ..... State 2 (GPIO12 (Pi))
LED6, green ..... State 1 (GPIO5 (Pi))

1.4.2.4 Communication between Raspberry Pi and PIC32 (BrickBUS)

The communication between the Raspberry Pi and the also mounted LWCS (PIC32) works over ModBUS RTU (UART). This means that you must program your Raspberry Pi as a remote master to send query commands to the LWCS (local master). The LWCS answers to these commands the same way like a coupling brick (uniBridge, patBridge) and regulate the communication with the BrickBUS.

You have two different UARTs to communicate between the Raspberry Pi and the LWCS. One is over an SPI to UART converter (standard) and the other way is over the UART port of the Raspberry Pi. You can choose between these two options by switching the jumpers on the positions JP1 and JP2.

In the following picture you can see the two options:

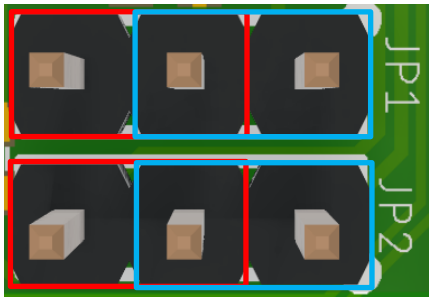

Over UART port
Over SPI to UART converter

1.4.2.5 Internal IO-Assigment to Raspberry PI

Ports on adapter board			Ports/Pins on Raspberry Pi	
Interface / Port	needs …	note	Pin	Pin usage / description
Serial A RS232 (De-bug)	TxD RxD EN		8 10 11	
Serial B RS232 (SPI2UART)	MOSI MISO CLK SEL INT	alternative usage with serial C	19 21 23 26 11	
Serial C RS485 (SPI2UART)	MOSI MISO CLK SEL EN	alternative usage with serial B	19 21 23 26 18	
CAN (SPI2CAN)	MOSI MISO CLK SEL INT		19 21 23 24 22	
EEPROM (I2C)	SDA SCL	I2C Address: 50h	3 5	
RTC (I2C)	SDA SCL	I2C Address: 6Fh	3 5	
Status-LED - green - yellow	 GPIO GPIO		 16 18	 Low = LED on Low = LED on

1.4.2.6 Internal IO-Assigment to PIC32

Ports on adapter board			Ports/Pins on Raspberry Pi	
Interface / Port	needs …	note	Pin	Pin usage / description
emBRICK	MOSI MISO CLK SEL		72 9 70 74	
Debug / VIS	TxD RxD	Serial port for debug-ging PIC / usage of the PC Visualisation	40 10	
Status-LED - green - yellow	 GPIO GPIO	 Communication ModBUS active	 7 8	 Low = LED on Low = LED on

1.4.2.7 Application Note

In addition to the notes in chapter 4, please regard the following:

- The different 0V and +24V terminals are connected internal. By using them the module can pass the supply on to another module.

1.4.3 CAE_Z-BeagleboneBrick-0# (for Beaglebone Black)

Bus Coupler, *Local-Master*
Remote Coupling Unit for
.. LAN (via Ethernet)
.. CAN
.. Serial (via RS485, RS232, TTL)
.. USB, SD Card
.. LCD-Display-Interf., Touch (res.)
.. RTC (Li-Bat/Hi-Cap), EEPROM

Modul ID	**1-711, 1-712**		
Order No.	**Z-BeagleboneBrick-0#**		
Terminals			
Size, Speed	**9 eU** (99mm x 72mm)	BB$_{FCP}$ **1-1-1**	
Variants: 0# =	**01:** full amount (1-711) **02:** no: serial, RTC, EEPROM, LCD-Display Interf (1-712)		

1.4.3.1 Description

It is an adaption board for the *Beaglebone Black* from TI which becomes an important professional industrial platform for many measure and control applications. By keeping the standard brick sizes, it is possible to use this board in all given mounting types.

The adaption unit is driven by 24Vdc and serves also as power-supply unit that delivers 3.3V and 24V for the slave modules. The LCSUL (together with the BBB) acts as an autarkic local-master and supply the logical control of the connected slave modules.

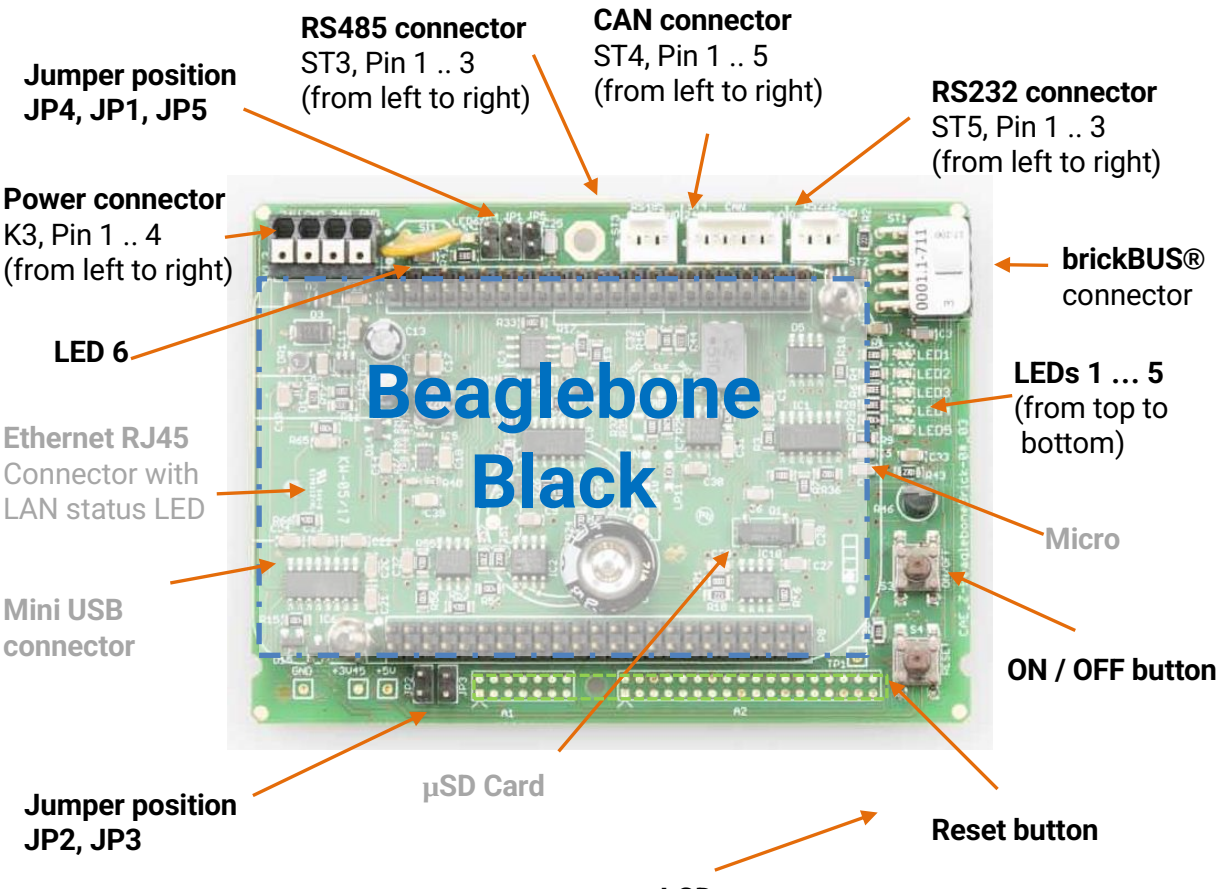

All grey comments are BeagleBone Black standard interfaces / functions.

1.4.3.2 Terminal Assingment

Beside the standard interfaces/connectors of the Beaglebone Black and the brickBUS® connector, this adaption board supports the following additional connectors:

Circuit Example	Ident.	Term	Function	Usage	internal simplified diagram
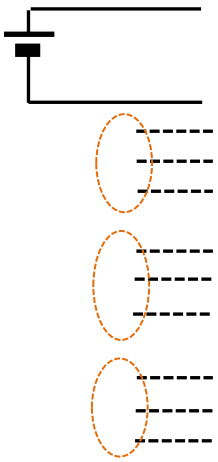	1	**K3/1**	Power Supply	+24V in	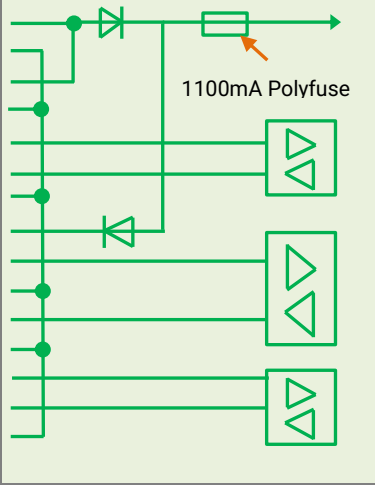
	2	**K3/2**		GND	
	3	**K3/3**		+24V in	
	4	**K3/4**		GND	
	A	**ST3/1**	Serial A RS485	RS485-A	
	B	**ST3/2**		RS485-B	
	GND	**ST3/3**		GND	
	+	**ST4/1**	CAN	+24V out	
	CH	**ST4/2**		CAN-H	
	GND	**ST4/3**		GND	
	CL	**ST4/4**		CAN-L	
	GND	**ST4/5**		GND	
	RXD	**ST2/1**	Serial B RS232	RxD (RS232)	
	TXD	**ST2/2**		RxD (RS232)	
	GND	**ST2/3**		GND	

Moreover it offer a display-connector for an standard 24Bit RGB-LCD.

1.4.3.3 LED Indications

LED1, orange ..... BeagleBone Black P9 Pin41
LED2, green ..... BeagleBone Black P9 Pin42
LED3, yellow ..... GPIO6 (used as *brickBUS®*-Select active output)
LED4, green ..... power supply for *brickBUS®* 3,3V
LED5, green ..... power supply for BeagleBone Black 5V
LED6 green ..... +5V output from BeagleBone Black P9 Pin7

1.4.3.4 Jumper functions

JP1..... termination resistor RS485
JP2..... address config for CAPE-EEProm, detail see table below
JP3..... address config for CAPE-EEProm, detail see table below
JP4..... if set, the GPIO7 is used for RS485 direction control
JP5..... if set, a delay for 9600 Baud is used for RS485 direction control

EEProm address configuration:

	JP2	JP3
54h	set	set
55h	open	set
56h	set	open
57h	open	open

1.4.3.5 Internal IO-Assigment to BBB

Ports on adapter board			Ports/Pins on the BBB		
Interface / Port	needs …	note	Con.	Pin	Pin usage / description
emBRICK	CLK MOSI MISO SEL		P9 P9 P9 P9	22 18 21 23	
CAN	CAN-TXD CAN-RXD	alternative to usage of I2C jumper necessary	P9 P9	24 26	
Serial A RS485	TXD RXD DIR	alternative usage with serial B jumper JP4 or JP5 is necessary	P9 P9 P9	13 11 12	useable as UART4 (/dev/ttyO4) if JP4 ist set, the GPIO7 High = transmit enabled
Serial B RS232	TXD RXD	alternative usage with serial A	P9 P9	13 11	useable as UART4 (/dev/ttyO4)
I2C for: - RTC - EEPROM	I2CAdress: 6Fh 50h	alternative to usage of CAN jumper necessary	P9 P9	24 26	
analog for: - 24V-Voltage - Temperature - Board-ID			 P9 P9 P9	 36 35 33	 AIN5 AIN6 AIN4
LCD with: - Contrast - Reset - Touch			 P9 P9	14 15 39 40 37 38	PWM AIN0 AIN1 AIN2 AIN3
Status-LED - orange - green			 P9 P9	 41 42	 CLKOUT GPIO0

Pin 19, 20 of P9 is connected to the CAPE-EEPROM

For more information please refer to the original BeagleBone Black System Reference Manual (BBB_SRM.pdf).

1.4.4 CAE_Z-BeagleboneBrick-1#-RB (for Beaglebone Black)

Bus Coupler, *Local-Master*
Remote Coupling Unit for
.. LAN (via Ethernet)
.. CAN
.. Serial (via RS485, RS232, TTL)
.. USB, SD Card
.. LCD-Display-Interf.
.. RTC (Li-Bat/Hi-Cap), EEPROM

Modul ID	**1-713, 1-714**			
Order No.	**Z-BeagleboneBrick-1#-RB**			
Terminals				
Size, Speed	**67mm x 86mm**	BB_{FCP}	**2-1-1**	
Variants: 1# =	**11:** full amount (1-713) **12:** no: LCD-Display Interf (1-714)			

1.4.4.1 Description

It is an adaption board for the *Beaglebone Black* from TI which becomes an important professional industrial platform for many measure and control applications. By keeping the standard brick sizes, it is possible to use this board in all given mounting types.

The adaption unit is driven by 24Vdc and serves also as power-supply unit that delivers 3.3V and 24V for the slave modules. The LCSUL (together with the BBB) acts as an autarkic local-master and supply the logical control of the connected slave modules.

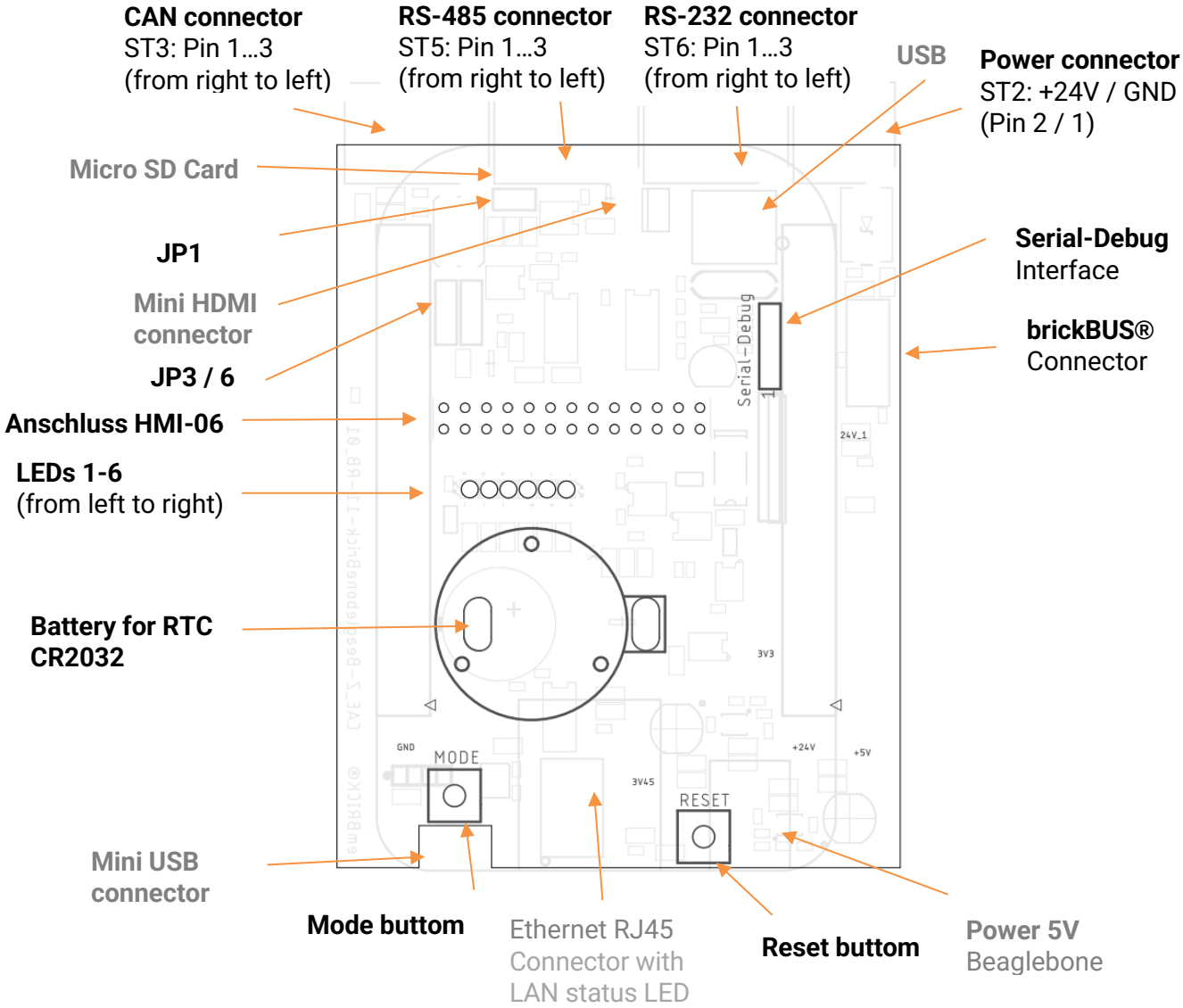

All grey comments are BeagleBone Black standard interfaces / functions.

1.4.4.2 Terminal Assingment

Beside the standard interfaces/connectors of the Beaglebone Black and the brickBUS® connector, this adaption board supports the following additional connectors:

Circuit Example	Ident.	Term	Function	Usage	internal simplified diagram
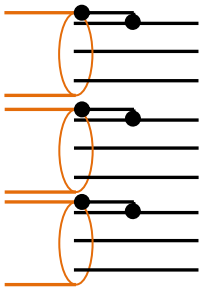	1	**ST2/1**	Power Supply	GND	
	2	**ST2/2**		+24V in	
	GND	**ST3/1**	CAN	GND	
	CH	**ST3/2**		CAN-H	
	CL	**ST3/3**		CAN-L	
	GND	**ST5/1**	Serial A RS485	GND	
	B	**ST5/2**		RS485-B	
	A	**ST5/3**		RS485-A	
	GND	**ST6/1**	Serial B RS232	GND	
	TXD	**ST6/2**		TxD (RS232)	
	RXD	**ST6/3**		RxD (RS232)	

1.4.4.3 LED Indications

LED1, yellow ..... BeagleBone Black P9 Pin41
LED2, green ..... BeagleBone Black P9 Pin42
LED3, yellow ..... GPIO6 (used as *brickBUS®*-Select active output)
LED4, green ..... power supply for *brickBUS®* 3,3V
LED5, green ..... power supply for BeagleBone Black 5V
LED6 green ..... +5V output from BeagleBone Black P9 Pin7

1.4.4.4 Jumper functions

JP1..... termination resistor RS485
JP3..... termination resistor CANH
JP4..... if set GPIO7 is DIR for RS485
JP5..... if set RS485 works with snubber for DIR and only 9600Bps
JP6..... termination resistor CANL

1.4.4.5 Internal IO-Assigment to BBB

Ports on adapter board			Ports/Pins on the BBB		
Interface / Port	needs …	note	Con.	Pin	Pin usage / description
emBRICK	CLK MOSI MISO SEL		P9 P9 P9 P9	22 18 21 23	
CAN	CAN-TXD CAN-RXD		P9 P9	24 26	
Serial A RS485	TXD RXD DIR		P9 P9 P9	13 11 12	 GPIO7, High = transmiton enable
Serial B RS232	TXD RXD		P8 P8	37 38	
I2C for: - RTC - EEPROM	I2CAdress: 6Fh 50h		P9 P9	19 20	
analog for: - 24V-Voltage - Temperature - Board-ID			 P9 P9 P9	 36 35 33	 AIN5 AIN6 AIN4
LCD with: - Backlight - Reset			 P8 P9	 9 15	
Cap. Touch 4 Buttoms			P8 P8 P8 P8	27 28 29 30	
Status-LED - orange - green			 P9 P9	 41 42	 CLKOUT GPIO0

For more information please refer to the original BeagleBone Black System Reference Manual (BBB_SRM.pdf).

1.4.5 CAE_Z-ArduinoBrick-0# (for Arduino XXX)

prospective

1.5 Cloud based Master

These configurations connects one or more brickBUS® strings via a coupling master and a cloud coupler to a cloud based portal.

1.5.1 Z-LWCS-web@ctrl1-## (from home2net)

The web@ctrl1 is an intelligent unit that supports a secure connection to a cloud service. It is the logical master, has also the possibility to communicate via the interbut and moreover supplies an internet PLC for automonous control applications. Here, the LWCS is the connection to the brick sting and its logic power supply.

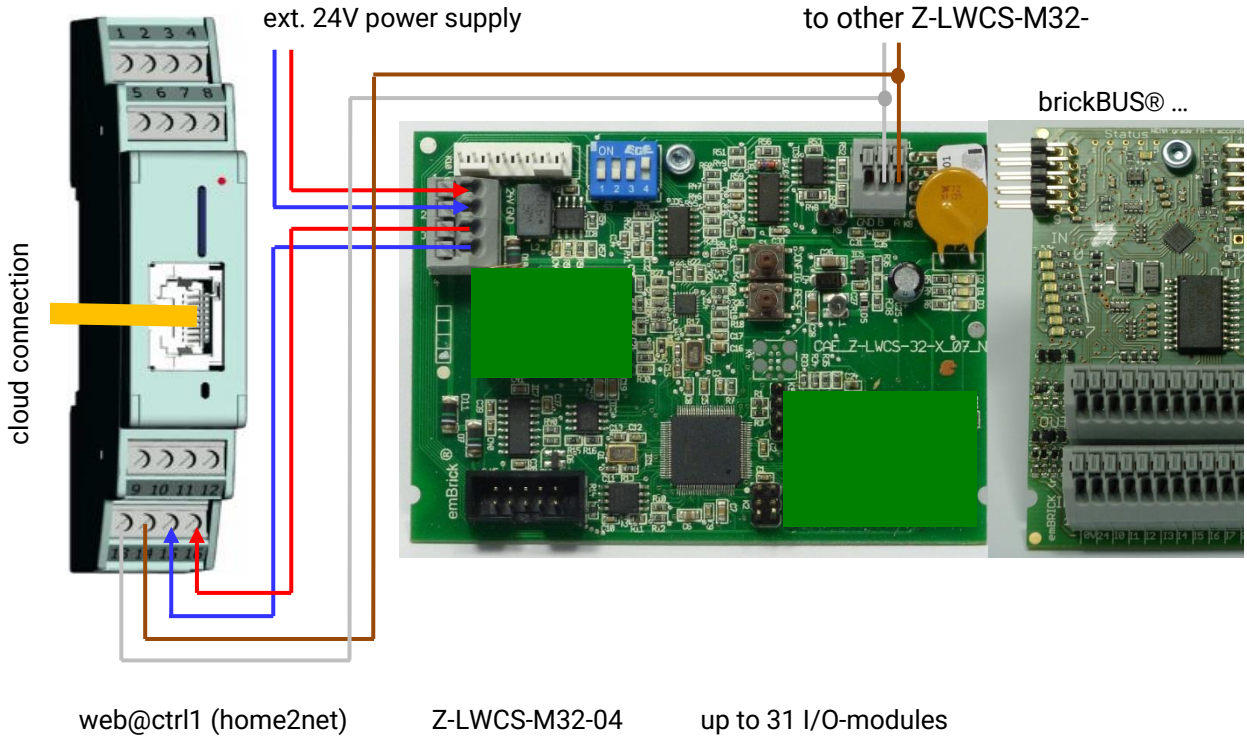

For more information about the usage and communiadation of the web@ctrl1 refer to http://www.home2net.de/de/produkte/webctrl.html

5. CAE Slave Components

One goal are the sector typical IO-types that support a direct connection from clamps to sensors/actors. Therefore the single modules are separated in families according to their corresponding domain of usage. A mixed operation is possible.

Away from the slave modules listed in this chapter it is possible to use other/own slave components/devices and/or create your own slave devices based on the free *brickBUS®* -stack code.

The slave moduls can be put into categories by their component group:

ID 2.xxx	G = **General Purpose**, typical PLC replacement
ID 3.xxx	S = **Safety**, safety critical applications SILx (prospective)
ID 4.xxx	B = **Building Automation**, e.g. light, heating, presence, jalousie, power, ...
ID 5.xxx	P = **Process Control**, e.g. measurement, regulation, motion, ...
ID 6.xxx	T = **Testing, Production**, e.g. components for testbenches
ID 7.xxx	M = **Medical/Care**, e.g. analytics, positioning (prospective)
ID 8.xxx	E = **Education/Entertainment**, e.g. breakout boards

5.1 General information

5.1.1 Status LED

Each slave module contains a status LED to signalize its internal and communication state via blink codes. These codes can be distinguished into error codes (like morse codes) and a continuous flashing.

uninitialized	continuous flashing approx. with 5 Hz
no_com	morse code: • — • (sent within 3s)
under_com	morse code: • • • (sent within 3s)
disturbed_com	morse code: • • — (sent within 3s)
running	continuous flashing approx. with 1 Hz (0.6Hz – 1.5Hz)

All other behaviours of the status-LED reflect a defect of the module.

For more infomation about the bus communication states refer to the system manual.

1.6 CAE G Bricks (General Purpose)

Modules for general purpose usage and global PLC replacement with standard-/norm In-/Outputs.

1.6.1 G-8Di8Do-01

8x Digital-Input, 24V, p-switch, 1-wire
8x Digital-Output, 24V, p-switch, 1-wire

Module ID	**2-181**			
Order No.	**CAE_G-8Di8Do-01 (-p)**			*
Terminals	**push-in** (≤ 0.5mm²)	Core	**M16A**	
Size	**4 eU** (44mm x 72mm)	BB_{FCP}	**1-1-1**	
Variants	**-**			

1.6.1.1 Brief Description

This module contains eight 24V digital inputs and eight 24V digital outputs. Each output supports a current of 0.25A but not more than 0.5A over all outputs in sum. All outputs have an over current protection and an over temperature protection.

The logical state of each in-/output is visualised by an LED. Common ground for in- and outputs are the 0V terminals. The outputs are supplied via the 24V terminals over a 0.5A polyfuse.

All terminals use push-in connection technology for solid and fine-stranded conductors with up to 0.5mm².

1.6.1.2 Connectors and Indication-/ Operation-Elements

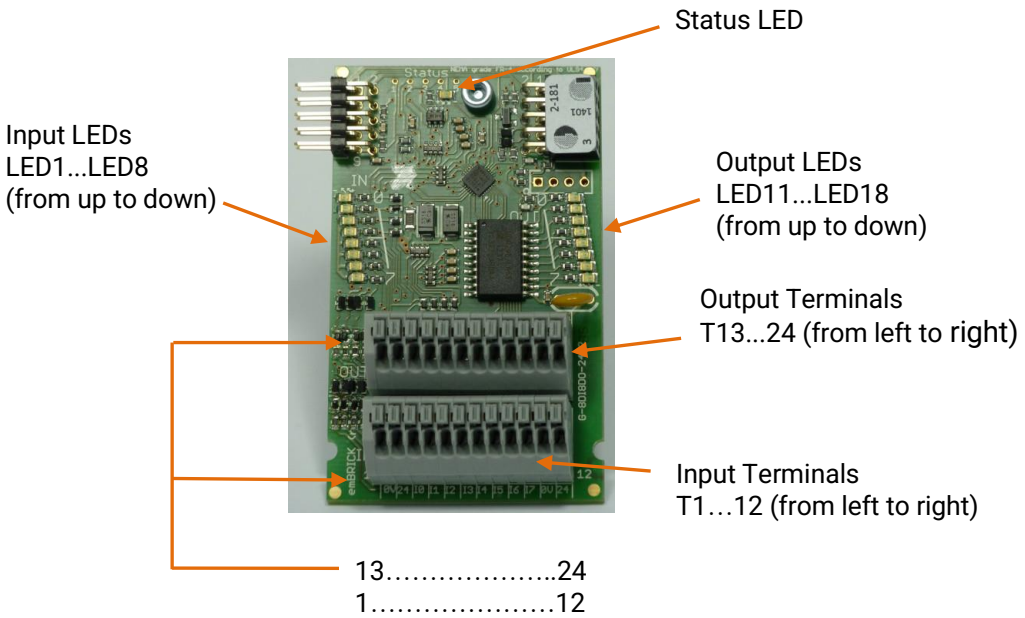

1.6.1.3 Terminal Assignment

Circuit Example

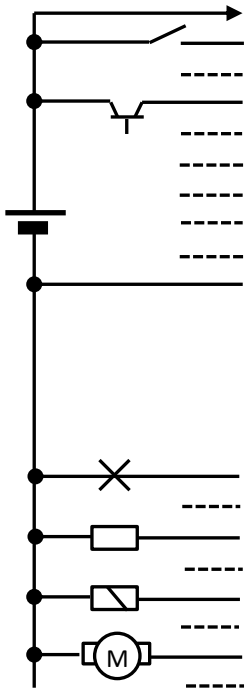

Ident.	Ter.	Function	Usage
(lower terminal row)			
0V	**1**	sep. supply power	GND
24	**2**		+24V
I1	**3**	Input 1	switching input
I2	**4**	Input 2	switching input
I3	**5**	Input 3	switching input
I4	**6**	Input 4	switching input
I5	**7**	Input 5	switching input
I6	**8**	Input 6	switching input
I7	**9**	Input 7	switching input
I8	**10**	Input 8	switching input
0V	**11**	sep. supply power	GND
24	**12**		+24V
(upper terminal row)			
0V	**13**	sep. supply power	GND
24	**14**		+24V
O1	**15**	Output 1	switching output
O2	**16**	Output 2	switching output
O3	**17**	Output 3	switching output
O4	**18**	Output 4	switching output
O5	**19**	Output 5	switching output
O6	**20**	Output 6	switching output
O7	**21**	Output 7	switching output
O8	**22**	Output 8	switching output
0V	**23**	sep. Supply Power	GND
24	**24**		+24V

internal simplified diagram

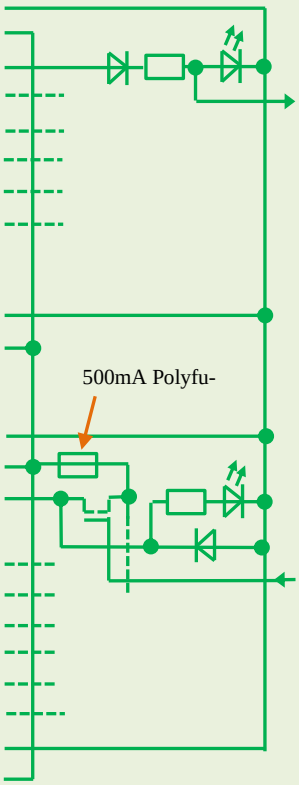

1.6.1.4 LED Indications

Input LED1...8 ..... status indication of the *Input I1...8*
Output LED11...18 ..... status indication of the *Output O1...8*
Status LED ..... module status (see **Fehler! Verweisquelle konnte nicht gefunden werden.**)

1.6.1.5 Application Note

In addition to the notes in chapter 4, please regard the following:

- The 0V and +24V terminals are connected together. By using them, the module can pass the supply on to another module.
- Each output can supply 250mA but the sum over all outputs of this module cannot exceed 500mA.
- All outputs are short circuit save (threshold ca. 350mA) and have a thermal overload protection.

1.6.1.6 Technical Data

Note: For further global specification refer to chapter 4

Input:
Number of digital inputs 8
Connection technology ..... 1-wire, common ground
Type ..... p-switching
"0" signal voltage ..... -3 ... 5V
"1" signal voltage ..... 15 ... 30V
Input current ..... typ. 3mA to 8mA at “1” Signal

Output:
Number of digital outputs..... 8
Connection technology ..... 1-wire, common ground
Type ..... p-switching
Output voltage ..... = level of *separate supply* power
Output current..... max. 250mA each, sum over all outputs 500mA, for details refer to the UDN2987 datasheet

Others:
Separate supply voltage ..... 24V DC ±10 % (used for output supply only)
Bus power consumption..... 0mA@24V, <10mA@3.3V
Isolation Bus to I/O ..... none (important details: consider to chapter 4)
Status indication ..... LEDs for each input, output and for the module status

Mechanics:
Terminals ..... 2 x 12, cage clamp Wago250
Connection..... usable with one litz wire from 0.2 – 0.5 mm²
Dimensions ..... 44 x 72 x 20 mm
Weight ..... approx. 30g

Options:
Plug-in terminals ..... optional available

1.6.1.7 Process Data Image

Out-Userdata **from** Master to Slave total: 1 Bytes			**In**-Userdata **to** Master from Slave total: 1 Bytes		
Byte	Function	rC Assign...	Byte	Function	rC Assign...
0	Digital Output 1…8 (DO1..8)	... + eB_B0, 0, 0, ... + eB_B0, 0, 7, ...	0	Digital Input 1…8 (DI1..8)	... + eB_B0, 0, ... + eB_B0, 7, ...

Digital Output

DO8	DO7	DO6	DO5	DO4	DO3	DO2	DO1
Bit 7							Bit 0

Bit 7-0 ..... DO<8:1>: Set Digital Outputs
1 = Set corresponding Output to HIGH
0 = Set corresponding Output to LOW

Digital Input

DI8	DI7	DI6	DI5	DI4	DI3	DI2	DI1
Bit 7							Bit 0

Bit 7-0 ..... DI<8:1>: Read Digital Inputs
1 = Corresponding Input is HIGH
0 = Corresponding Input is LOW

1.6.1.8 Programming Note

In addition to the notes in chapter 4, please regard the following:

- A software generated pseudo PWM is possible till approx. 10Hz (depends on the bus/module update rate).

1.6.2 G-8Rel8Di-01-RB

8x Relay-Output, NO, potential free
8x Digital-Input, 24V, p-switch, 1-wire

Module ID	**2-183**			
Order No.	**G-8Rel8Di-01-RB**			*
Terminals	**Cage clamp**	Core	**M16A**	
Size	**72 × 90 mm**	BB_{FCP}	**2-1-1**	
Variants	**-**			

1.6.2.1 Brief Description

This module contains eight 24V digital inputs and eight potential free relay outputs. Each output supports a current of 6A. Outputs are either specified for extra-low voltages (≤120V DC / ≤50V AC) or for low voltages (≥50V AC / ≥120V DC) but not for both at the same time. The logical state of each in-/output is visualised by an LED. Common ground for inputs are the terminal pins 17 and 26. All terminals uses cage clamp connection technology by default with 3.5mm pin spacing.

1.6.2.2 Connectors and Indication-/Operation-Elements

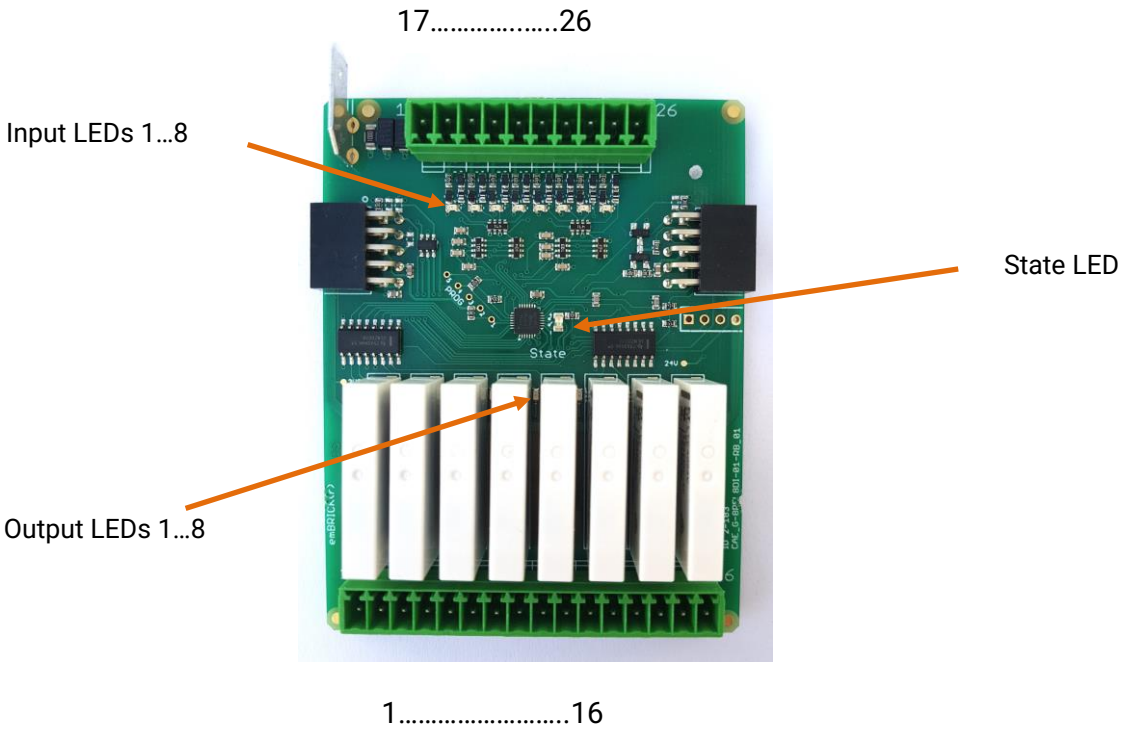

1.6.2.3 Terminal Assignment

Circuit Example	Ident.	Ter.	Function	Usage	internal simplified diagram
	(upper terminal row)				
	0V	**17**	External ground	GND	
	I1	**18**	Input 1	switching input	
	I2	**19**	Input 2	switching input	
	I3	**20**	Input 3	switching input	
	I4	**21**	Input 4	switching input	
	I5	**22**	Input 5	switching input	
	I6	**23**	Input 6	switching input	
	I7	**24**	Input 7	switching input	
	I8	**25**	Input 8	switching input	
	0V	**26**	External ground	GND	
	(lower terminal row)				
	CO1	**1**	Relay 1	common	
	NO1	**2**		normally open	
	CO2	**3**	Relay 2	common	
	NO2	**4**		normally open	
	CO3	**5**	Relay 3	common	
	NO3	**6**		normally open	
	CO4	**7**	Relay 4	common	
	NO4	**8**		normally open	
	CO5	**9**	Relay 5	common	
	NO5	**10**		normally open	
	CO6	**11**	Relay 6	common	
	NO6	**12**		normally open	
	CO7	**13**	Relay 7	common	
	NO7	**14**		normally open	
	CO8	**15**	Relay 8	common	
	NO8	**16**		normally open	

1.6.2.4 LED Indications

Input 1...8 ..... status indication of the *Input I1...8*
Output 1…8 ..... status indication of the *Output O1...8*
Status LED ..... module status (see **Fehler! Verweisquelle konnte nicht gefunden werden.**)

1.6.2.5 Technical Data

Input:
Number of digital inputs 8
Connection technology ..... 1-wire, common ground
Type ..... p-switching
"0" signal voltage ..... -3 ... 5V
"1" signal voltage ..... 15 ... 30V
Input current ..... typ. 3mA to 8mA at “1” Signal

Output:
Number of Relays NO..... 8 (normal open, each with 2 terminals)
Type ..... isolated
Switching voltage ..... max. 230V AC / 24V DC
Switching current ..... max. 6A AC/DC, for details refer to the LYCA024V datasheet. The terminal blocks rated VDE 250V/3A, UL 300V/6A. The user has to install an appropriate fuse in the supply line of the relays.
Permanent load ..... max. 4A AC/DC
Lifetime ..... refer to the LYCA024V datasheet

Others:
Bus power consumption..... 50mA@24V, <15mA@3.3V
Isolation Bus to I/O ..... none (important details: consider to chapter 4)
Status indication ..... LEDs for each input, output and for the module status

Mechanics:
Terminals ..... cage clamp i.e. PTR STL1550/…-3.5 with 3.5mm pin spacing
Connection..... usable with solid/stranded wire from 0.14 – 1.5 mm²
Dimensions ..... 72 x 90 x 20 mm
Weight ..... approx. 70g

Options:
Plug-in terminals ..... optional available (PTR AK1550/…-3.5)

Out-Userdata **from** Master to Slave total: 1 Bytes			**In**-Userdata **to** Master from Slave total: 1 Bytes		
Byte	Function	rC Assign...	Byte	Function	rC Assign...
0	Digital Output 1…8 (DO1..8)	... + eB_B0, 0, 0, ... + eB_B0, 0, 7, ...	0	Digital Input 1…8 (DI1..8)	... + eB_B0, 0, ... + eB_B0, 7, ...

1.1.1.4 Process Data Image

Digital Output

DO8-	DO7	DO6	DO5	DO4	DO3	DO2	DO1
Bit 7							Bit 0

Bit 7-0 ..... DO<8:1>: Set Digital Outputs
1 = Set corresponding Relay to closed
0 = Set corresponding Relay to open

Digital Input

DI8	DI7	DI6	DI5	DI4	DI3	DI2	DI1
Bit 7							Bit 0

Bit 7-0 ..... DI<8:1>: Read Digital Inputs
1 = Corresponding Input is HIGH
0 = Corresponding Input is LOW

1.6.2.6 Programming Note

In addition to the notes in chapter 4, please regard the following:

- A software generated pseudo PWM is possible till approx. 10Hz (depends on the bus/module update rate).

1.6.3 G-4Do-01-RB

4x Digital-Output, 24V, p-switch, 1-wire

Module ID	**2-184**			
Order No.	**G-4Do-01-RB**			*
Terminals	**Cage clamp**	Core	**M16A**	
Size	**36 × 90 mm**	BB_{FCP}	**2-1-1**	
Variants	**-**			

1.6.3.1 Brief Description

This module contains four 24V digital outputs. Each output supports a current of 3A but not more than 5A over all outputs in sum. All outputs have an over current protection and an over temperature protection. The logical state of each output is visualised by an LED. Common ground for outputs are the GND terminals. These are connected to the bus ground. The outputs are supplied via the power terminal.

1.6.3.2 Connectors and Indication-/Operation-Elements

9.....12

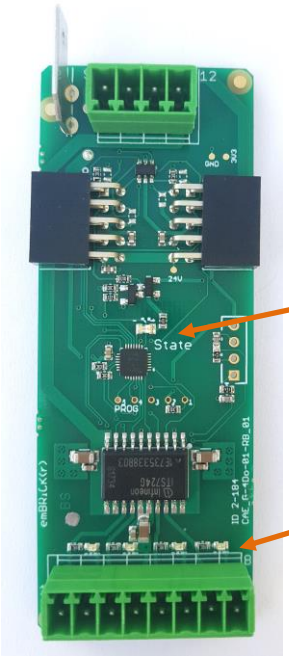

1.....8

1.6.3.3 Terminal Assignment

Circuit Example	Ident.	Ter.	Function	Usage	internal simplified diagram
	(lower terminal row)				
	O1	**1**	Output 1	Switching output	
	GND	**2**	Ground	Ground	
	O2	**3**	Output 2	Switching output	
	GND	**4**	Ground	Ground	
	O3	**5**	Output 3	Switching output	
	GND	**6**	Ground	Ground	
	O4	**7**	Output 4	Switching output	
	GND	**8**	Ground	Ground	
	(upper terminal row)				
	GND	**9**	External power supply	Ground	
	24V	**10**		24V	
	GND	**11**		Ground	
	24V	**12**		24V	

- **LED Indications**

Output 1…4 ..... status indication of the *Output O1...4*
Status LED ..... module status (see **Fehler! Verweisquelle konnte nicht gefunden werden.**)

1.6.3.4 Technical Data

Note: For further global specification refer to chapter 4

Output:
Number of digital outputs..... 4
Connection technology ..... 1-wire, common ground
Type..... p-switching
Output voltage ..... 12…36V (depends on external supply)
Output current..... max. 3A each, sum over all outputs 5A, for details refer to the ITS724G datasheet
Thermal overload trip temp ..... 150°C (10°C hysteresis)

Others:
Separate supply voltage ..... 12…36V DC ±10 % (used for output supply only)
Bus power consumption..... 0mA@24V, <10mA@3.3V
Isolation Bus to I/O ..... none (important details: consider to chapter 4)
Status indication ..... LEDs for each input, output and for the module status

Mechanics:
Terminals ..... cage clamp i.e. PTR STL1550/…-3.5 with 3.5mm pin spacing
Connection..... usable with solid/stranded wire from 0.14 – 1.5 mm²
Dimensions ..... 36 x 90 x 20 mm
Weight ..... approx. 20g

Options:
Plug-in terminals ..... optional available (PTR AK1550/…-3.5)

Out-Userdata **from** Master to Slave total: 1 Bytes			**In**-Userdata **to** Master from Slave total: 1 Bytes		
Byte	Function	rC Assign...	Byte	Function	rC Assign...
0	Digital Output 1…4 (DO1..4)	... + eB_B0, 0, 0, ... + eB_B0, 0, 7, ...	0	Digital Input 1+ 2 (DI1..2)	... + eB_B0, 0, ... + eB_B0, 7, ...

1.6.3.5 Process Data Image

Digital Output

-	-	-	-	DO4	DO3	DO2	DO1
Bit 7							Bit 0

Bit 7-0 ..... DO<8:1>: Set Digital Outputs
1 = Set corresponding Relay to closed
0 = Set corresponding Relay to open

Digital Input

-	-	-	-	-	-	DI2	DI1
Bit 7							Bit 0

Bit 1 ..... DI2: Feedback Do 3 and 4
1 = Output is ok
0 = Overtemperature or overcurrent have occurred

Bit 0 ..... DI1: Feedback Do 1 and 2
1 = Output is ok
0 = Overtemperature or overcurrent have occurred

1.1.1.5 Programming Note

In addition to the notes in chapter 4, please regard the following:

- A software generated pseudo PWM is possible till approx. 10Hz (depends on the bus/module update rate).

1.6.4 G-4Di4Do-01

4x Digital-Input, 24V, p-switch, 1-wire
4x Digital-Output, 24V, p-switch, 1-wire

Module ID	**2-185**			
Order No.	**CAE_G-4Di4Do-01 (-p)**			*
Terminals	**push-in** (≤ 0.5mm²)	Core	**M16A**	
Size	**4 eU** (44mm x 72mm)	BB_{FCP}	**1-1-1**	
Variants	**-**			

1.6.4.1 Description

This module contains four 24V digital inputs and four 24V digital outputs. Each output supports a current of 0.25A but not more than 0.5A over all outputs in sum. All outputs have an over current protection and an over temperature protection.

The logical state of each in-/output is visualised by an LED. Common ground for in- and outputs are the 0V terminals. The outputs are supplied via the 24V terminals over a 0.5A polyfuse.

All terminals use push-in connection technology for solid and fine-stranded conductors with up to 0.5mm².

1.6.4.2 Connectors and Indication-/ Operation-Elements

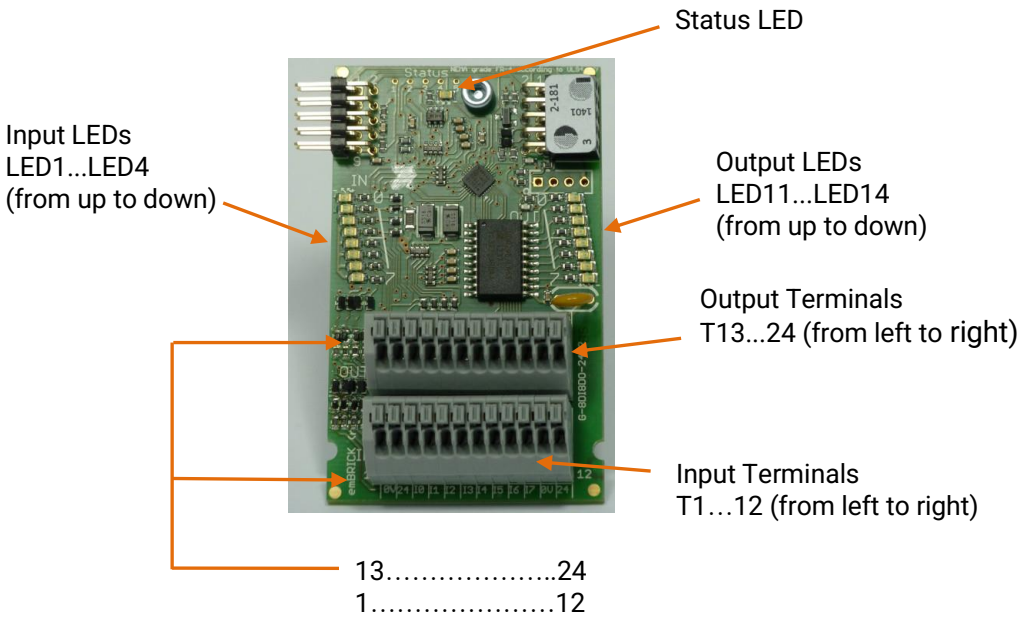

1.6.4.3 Terminal Assignment

Circuit Example	Ident.	Ter.	Function	Usage	internal simplified diagram
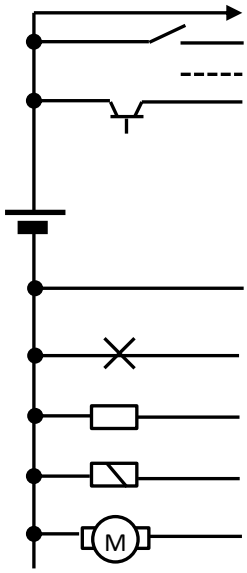	(lower terminal row)				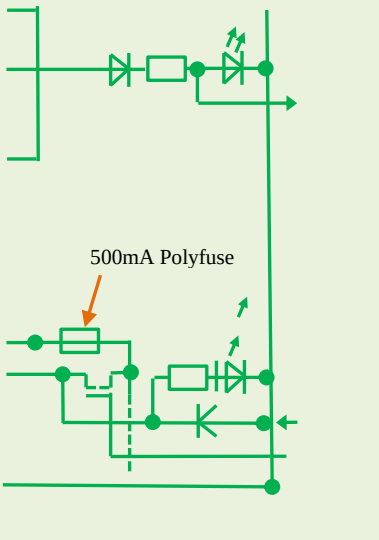
	0V	**1**	sep. supply power	GND	
	I1	**2**	Input 1	switching input	
	I2	**3**	Input 2	switching input	
	I3	**4**	Input 3	switching input	
	I4	**5**	Input 4	switching input	
	0V	**6**	sep. supply power	GND	
	(upper terminal row)				
	24	**7**	sep. supply power	+24V	
	O1	**8**	Output 1	switching output	
	O2	**9**	Output 2	switching output	
	O3	**10**	Output 3	switching output	
	O4	**11**	Output 4	switching output	
	24	**13**	sep. Supply Power	+24V	

1.6.4.4 LED Indications

Input LED1...4 ..... status indication of the *Input I1...4*
Output LED11...14 ..... status indication of the *Output O1...4*
Status LED ..... module status (see **Fehler! Verweisquelle konnte nicht gefunden werden.**)

1.6.4.5 Application Note

In addition to the notes in chapter 4, please regard the following:

- The 0V and +24V terminals are connected together. By using them, the module can pass the supply on to another module.
- Each output can supply 250mA but the sum over all outputs of this module cannot exceed 500mA.
- All outputs are short circuit save (threshold ca. 350mA) and have a thermal overload protection.

1.6.4.6 Technical Data

Note: For further global specification refer to chapter 4

Input:
Number of digital inputs 4
Connection technology ..... 1-wire, common ground
Type ..... p-switching
"0" signal voltage ..... -3 ... 5V
"1" signal voltage ..... 15 ... 30V
Input current ..... typ. 3mA to 8mA at “1” Signal

Output:
Number of digital outputs..... 4
Connection technology ..... 1-wire, common ground
Type ..... p-switching
Output voltage ..... = level of *separate supply* power
Output current..... max. 250mA each, sum over all outputs 500mA, for details refer to the UDN2987 datasheet

Others:
Separate supply voltage ..... 24V DC ±10 % (used for output supply only)
Bus power consumption..... 0mA@24V, <10mA@3.3V
Isolation Bus to I/O ..... none (important details: consider to chapter 4)
Status indication ..... LEDs for each input, output and for the module status

Mechanics:
Terminals ..... 2 x 6, cage clamp Wago250-506
Connection..... usable with one litz wire from 0.5 – 1.5 mm²
Dimensions ..... 44 x 72 x 20 mm
Weight ..... approx. 30g

Options:
Plug-in terminals ..... optional available

1.6.4.7 Process Data Image

Out-Userdata **from** Master to Slave total: 1 Bytes			**In**-Userdata **to** Master from Slave total: 1 Bytes		
Byte	Function	rC Assign...	Byte	Function	rC Assign...
0	Digital Output 1…4 (DO1..4)	... + eB_B0, 0, 0, ... + eB_B0, 0, 3, ...	0	Digital Input 1…4 (DI1..4)	... + eB_B0, 0, ... + eB_B0, 3, ...

Digital Output

-	-	-	-	DO4	DO3	DO2	DO1
Bit 7							Bit 0

Bit 3-0 ..... DO<4:1>: Set Digital Outputs
1 = Set corresponding Output to HIGH
0 = Set corresponding Output to LOW

Digital Input

-	-	-	-	DI4	DI3	DI2	DI1
Bit 7							Bit 0

Bit 3-0 ..... DI<4:1>: Read Digital Inputs
1 = Corresponding Input is HIGH
0 = Corresponding Input is LOW

1.6.4.8 Programming Note

In addition to the notes in chapter 4, please regard the following:

- A software generated pseudo PWM is possible till approx. 10Hz (depends on the bus/module update rate).

1.6.5 G-2RelNo4RelCo-01

2x Relay-Output, NO, potential free
4x Relay-Output, CO, potential free

Module ID	**2-301**		
Order No.	**CAE_G-2RelNo4RelCo-01**		
Terminals	**push-in** (for ≤ 1.5mm²)	Core	**M16A**
Size	**6 eU** (66mm x 72mm)	BB_{FCP}	**1-1-1**
Variants	**-**		

1.6.5.1 Brief Description

This Relay module includes six isolated Relays. Each can switch a current of max. 4A. The first two are closing contacts. The other four are changeover contacts. The state of each relay is visualized by an LED.

1.6.5.2 Connectors and Indication-/Operation-Elements

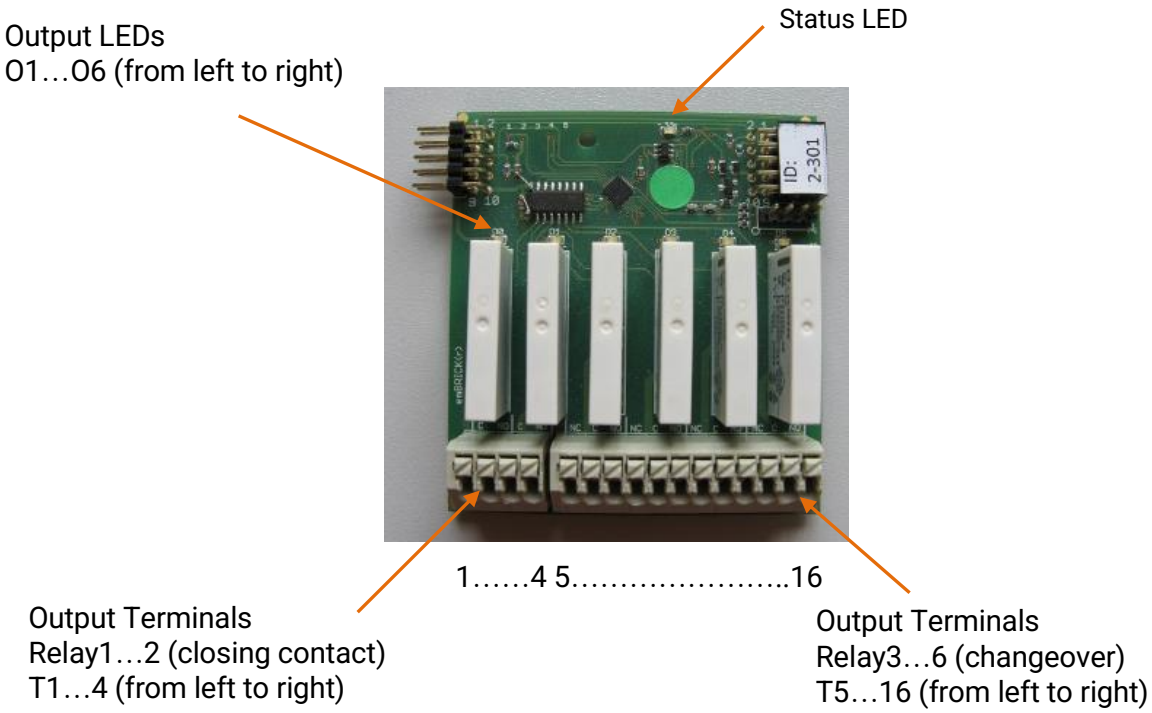

1.6.5.3 Terminal Assignment

Circuit Example	Ident.	Ter.	Function	Usage	internal simplified diagram
L1	CO	**1**	Relay 1	change-over	
N	NO	**2**		normally-open	
	CO	**3**	Relay 2	change-over	
	NO	**4**		normally-open	
N	NC	**5**	Relay 3	normally-closed	
I 1	CO	**6**		change-over	
N	NO	**7**		normally-open	
	NC	**8**	Relay 4	normally-closed	
	CO	**9**		change-over	
	NO	**10**		normally-open	
	NC	**11**	Relay 5	normally-closed	
L1	CO	**12**		change-over	
N	NO	**13**		normally-open	
	NC	**14**	Relay 6	normally-closed	
	CO	**15**		change-over	
	NO	**16**		normally-open	

1.6.5.4 LED Indications

Output-LED1..6 ..... status indication of the output Relays 1..6
Status-LED..... module status (see **Fehler! Verweisquelle konnte nicht gefunden werden.**)

1.6.5.5 Application Note

In Addition to the notes in chapter 4, please regard the following:

- All six relay have to operate on the same voltage level 230VAC or 24VAC or 24VDC. A mixture of different voltage levels is **not** allowed.
- The user has to install an appropriate fuse in the lines concerning the technical data below.
- This module support relay contacts. Depending on the electrical application, the user has to install sufficient additional components to fulfill the EMC-standards and the requirements of the relay producer (see relay datasheet), especially when driving inductive/capacitive or high inrush current loads.

1.6.5.6 Technical Data

Note: For further global specifications refer to chapter 4

Outputs:

Number of Relays NO..... 2 (normal open, each with 2 terminals)
Number of Relays CO..... 4 (change over, each with 3 terminal)
Type..... isolated
Switching voltage..... max. 230Vac / 24Vdc
Switching current ..... max. 6A ac/dc, for details refer to the LYCA024V datasheet. The terminal blocks rated VDE 250V/3A, UL 300V/6A. The user has to install an appropriate fuse in the supply line of the relays.
Permanent load ..... max. 4 Aac/dc
Lifetime ..... refer to the LYCA024V datasheet

Others:

Separate supply voltage ..... 24V DC ±10 % (by brickBUS, used for relay supply only)
Bus power consumption..... 0..50mA@24V, <10mA@3.3V
Status indication ..... LEDs for each output and for the module status

Mechanics:

Terminals ..... 4 + 12, cage clamp Wago250
Connection..... usable with one litz wire from 0.2 – 1.5 mm²
Dimensions ..... 66 x 72 x 20 mm
Weight ..... approx. 60 g

1.6.5.7 Process Data Image

Out-Userdata **from** Master to Slave total: 1 Bytes			**In**-Userdata **to** Master from Slave total: 0 Bytes		
Byte	Function	rC Assign...	Byte	Function	rC Assign...
0	Relay Control Bit 0 = Relay 1 ... Bit 5 = Relay 6	 ... + eB_B0, 0, 0, ... + eB_B0, 0, 5, ...	none		

Relay Control

-	-	REL6	REL5	REL4	REL3	REL2	REL1
Bit 7							Bit 0

Bit 5-0 ..... REL <6:1>: Relais Output
1 = activate corresponding Relay
0 = deactivate corresponding Relay

1.6.5.8 Programming Note

In Addition to the notes in chapter 4, please regard the following:

none

1.6.6 G-3RelNo-0#

3x Relay-Output, NO, pot.-free

Module ID	**2-302, 2-303**		
Order No.	**CAE_G-3RelNo-0#**		
Terminals	**Screw or AMP**	Core	**M16A**
Size	**10 eU** (110mm x 72mm)	BB_{FCP}	**1-1-1**
Variants 0# =	**01:** relays 230V, permanent load 16A (2-302) **02:** relays 400V, permanent load 6A (2-303)		

1.6.6.1 Brief Description

This module includes 3 isolated Relays. All three are closing contacts.
It is useable as a power connector.

1.6.6.2 Connections an Indication-/Operation Elements

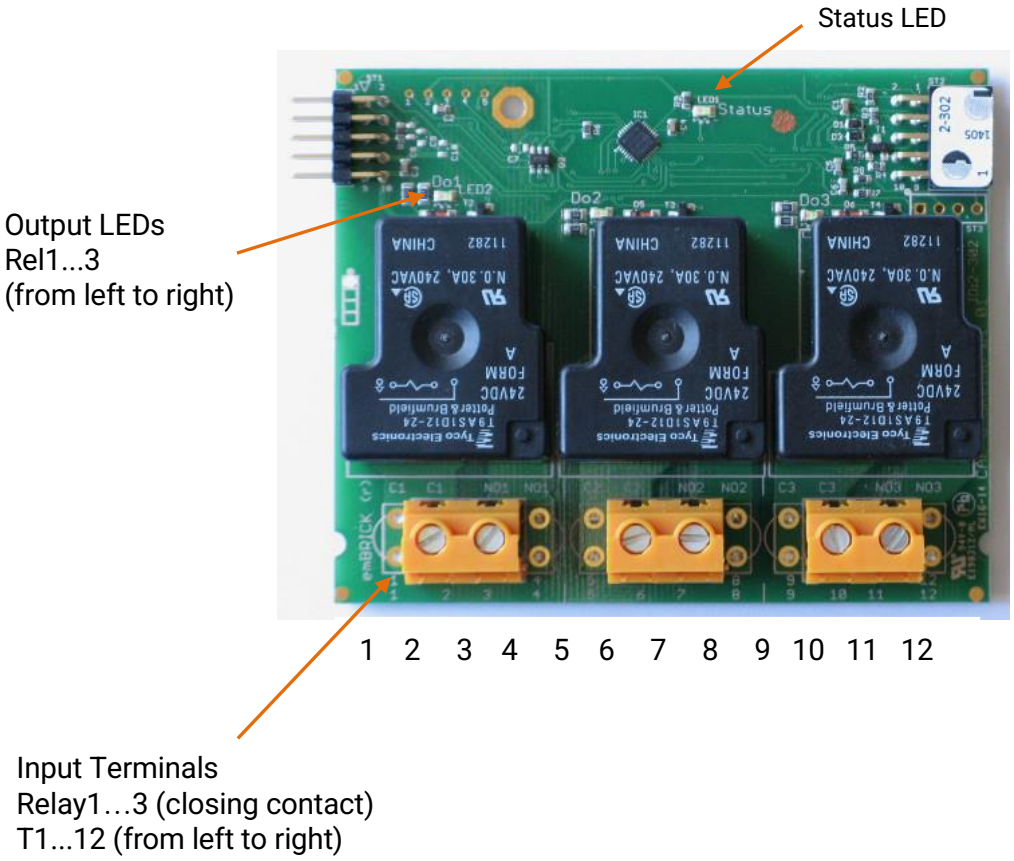

1.6.6.3 Terminal Assignment

Circuit Example	Ident.	Ter.	Function	Usage	internal simplified diagram
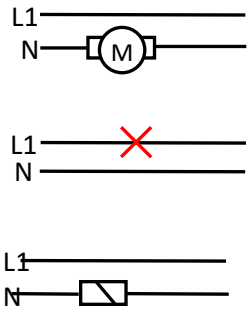	CO1	**1**	Relay 1 (corner contacts via AMP-plug)	change-over	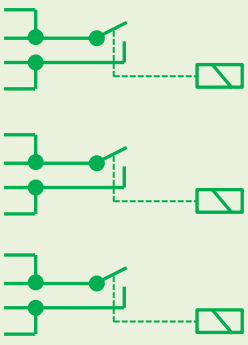
	CO1	**2**			
	NO1	**3**		normally-open	
	NO1	**4**			
	CO2	**5**	Relay 2 (corner contacts via AMP-plug)	change-over	
	CO2	**6**			
	NO2	**7**		normally-open	
	NO2	**8**			
	CO3	**9**	Relay 3 (corner contacts via AMP-plug)	change-over	
	CO3	**10**			
	NO3	**11**		normally-open	
	NO3	**12**			

1.6.6.4 LED Indications

LED1..3 ..... status indication of the outputs relay 1..3
Status-LED ..... module status (see **Fehler! Verweisquelle konnte nicht gefunden werden.**)

1.6.6.5 Application Note

In Addition to the notes in chapter **4**, please regard the following:

- All three relays have to operate on the same voltage level 230VAC or 24VAC or 24VDC. A mixture of different voltage levels is not allowed.
- When using the module in 3 phase-operation, the electrical load must have a star point that is connected to N of the supply. Driving a load with delta-connection is not allowed.
- The user must install an appropriate fuse in the supply line of the relays.
- This module support relay contacts. Depending on the electrical application, the user has to install sufficient additional components to fulfill the EMC-standards and the requirements of the relay producer (see relay datasheet), especially when driving inductive/capacitive or high inrush current loads.

1.6.6.6 Technical Data

Note: For further global specification aditionally refer to chapter 4

Outputs:

Number of relays..... 3x normal open (NO)
Type..... isolated
Switching voltage (-01) ..... max. 240Vac / 28Vdc
Switching voltage (-02) ..... max. 400Vac / 30Vdc
Contact current (-01)..... max. 30Aac / 20Adc, for details refer to the T9AS1D datasheet
Contact current (-02)..... max. 10Aac / 10Adc for details refer to the F4341-24S datasheet
Permanent load (-01) ..... max. 16 Aac / 16 Adc
Permanent load (-02) ..... max. 6 Aac / 6 Adc
Lifetime ..... refer to the T9AS1D/ F4341-24S datasheet

Others:

Separate supply voltage ..... 24V DC ±10 % (used for relay supply only)
Bus power consumption..... 0..150mA@24V, <10mA@3.3V
Status indication ..... LEDs for each output and for the module status

Mechanics:

Terminals ..... 6, screw terminals
Connection..... usable with one litz wire from 0.5 –6 mm² and AMP
Dimensions ..... 88 x 72 x 20 mm
Weight ..... approx. 100 g

Options:

AMP-6,3 terminals..... optional available

1.6.6.7 Process Data Image

Out-Userdata **from** Master to Slave total: 1 Bytes			**In**-Userdata **to** Master from Slave total: 0 Bytes		
Byte	Function	rC Assign...	Byte	Function	rC Assign...
0	Relay Control Bit 0 = single Relay 1 ... Bit 2 = single Relay 3 Bit 3 = activation of all 3 relay	 ... + eB_B0, 0, 0, ... + eB_B0, 0, 2, ... + eB_B0, 0, 3, ...	none		

Relay Control

-	-	-	-	AAR	REL3	REL2	REL1
Bit 7							Bit 0

Bit 3 ..... AAR: Activate all 3 Relays
1 = activate all Relays, regardless of REL
0 = Switch Relays according to REL1..3
Bit 2-0 ..... REL<3:1>: Relay control (if AAR = 0)
1 = activate corresponding Relay
0 = deactivate corresponding Relay

1.6.6.8 Programming Note

In Addition to the notes in chapter **4**, please regard the following:

- The relays can each be activated individually by setting/resetting the Bit 0 ... 2 or all three relays together by activating Bit 3. This is a logical OR operation.

1.6.7 G-6Ai2Tmp-0#

6x Analog-Input, 10V/20mA, 2/3-wire
2x Temperature, KTY, PT1000, 2-wire

Modul ID	**2-420, 2-421, 2-422, 2-423**		
Order No.	**CAE_G-6Ai2Tmp-0# (-p)**		
Terminals	**cage clamp**	Core	**M16E**
Size	**4 eU** (44mm x 72mm)	BB_{FCP}	**1-1-1**
Variants 0# =	**01:** 0..10V, KTY2k, 0..50°C (2-420) **02:** 0..10V, PT1000, 0..50°C (2-421) **03:** 0/4..20mA, KTY2k, 0..50°C (2-422) **04:** 0/4..20mA, PT1000, 0..50°C (2-423) (others on request)		

1.6.7.1 Brief Description

The module includes six analog inputs (current/voltage) and two temperature inputs for a KTY2k/PT1000 with a range from 0°C up to 50°C.

For each input/sensor double terminals (ground, input) are available. An additional connected terminal field can be used for power supply distribution to the sensors. Therefore a direct connection of the sensors without separate clamps is available.

Other temperature ranges / sensors on request.

1.6.7.2 Connectors and Indication-/Operation-Elements

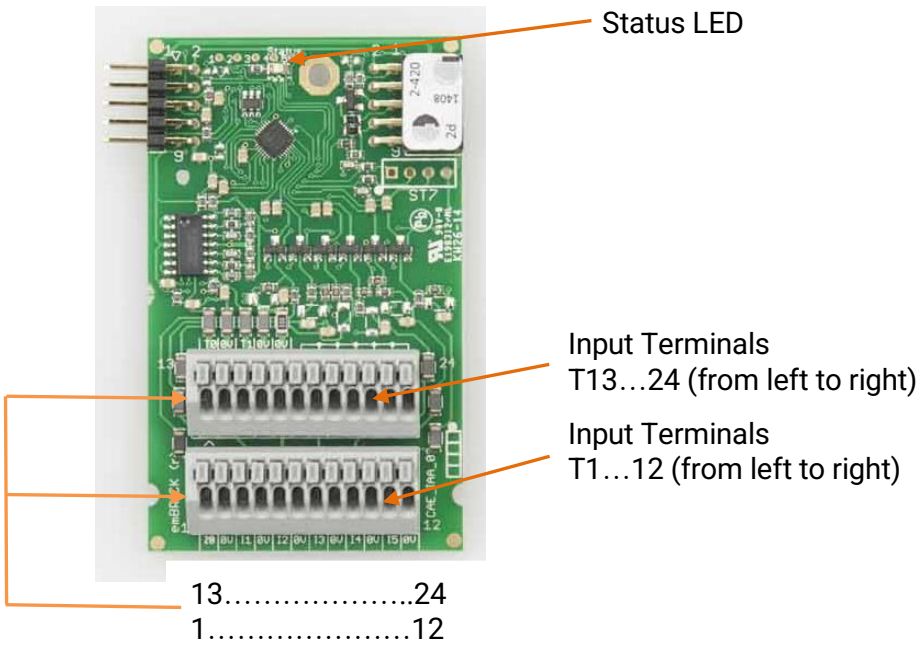

1.6.7.3 Terminal Assignment

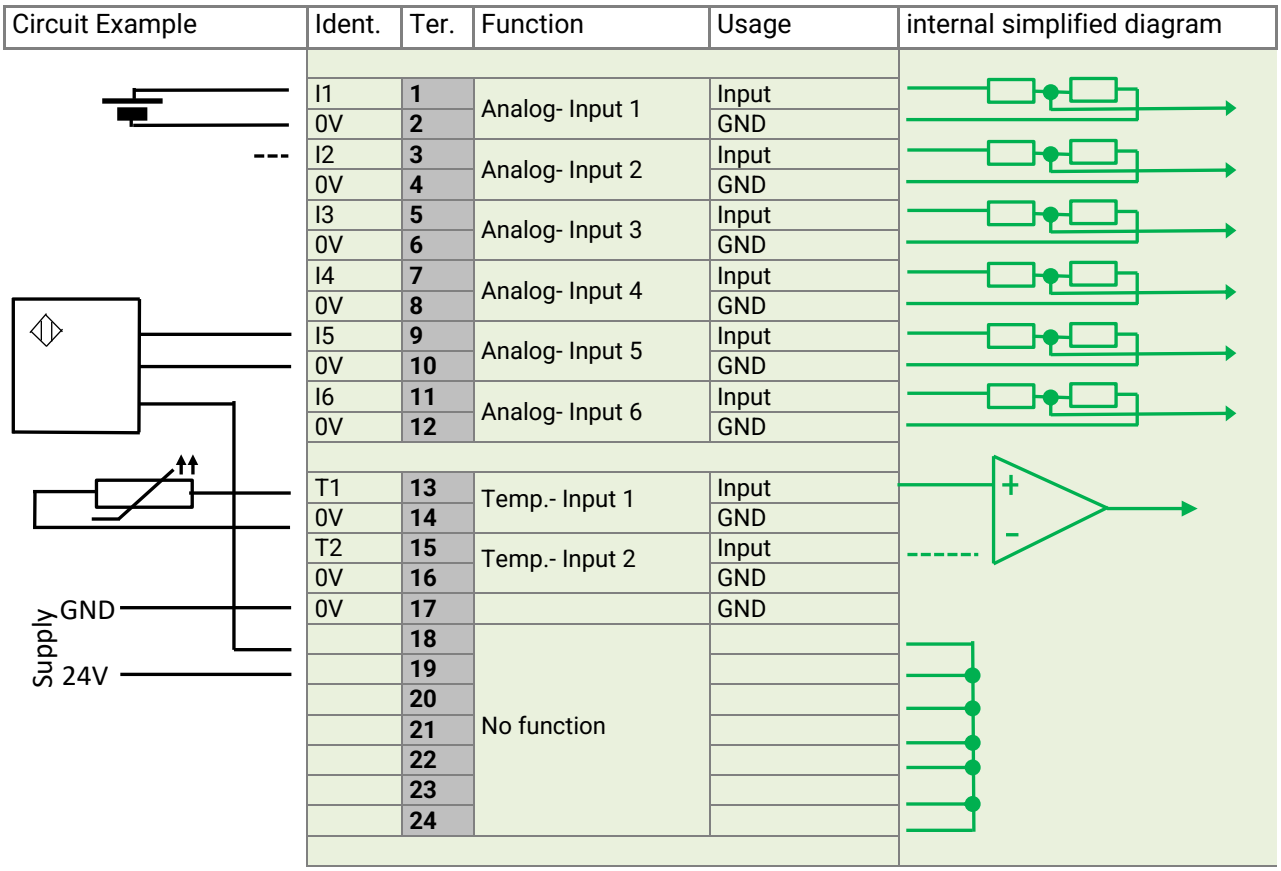

Ident.	Ter.	Function	Usage
I1	1	Analog- Input 1	Input
0V	2		GND
I2	3	Analog- Input 2	Input
0V	4		GND
I3	5	Analog- Input 3	Input
0V	6		GND
I4	7	Analog- Input 4	Input
0V	8		GND
I5	9	Analog- Input 5	Input
0V	10		GND
I6	11	Analog- Input 6	Input
0V	12		GND
T1	13	Temp.- Input 1	Input
0V	14		GND
T2	15	Temp.- Input 2	Input
0V	16		GND
0V	17		GND
	18	No function	
	19		
	20		
	21		
	22		
	23		
	24		

1.6.7.4 LED Indications

Status-LED ..... module status (see **Fehler! Verweisquelle konnte nicht gefunden werden.**)

1.6.7.5 Application Note

In addition to the notes in chapter 4, please regard the following:

- The shield of the sensor should be connected to PE.
- The terminals 18 ... 24 are only to duplicate the supply e.g. for sensors. Do not exceed voltages over 35V and currents over 500mA.
- Make sure that the GND of the analog signals is connected to the 0V terminal. Otherwise the measurement will be less precise.

1.6.7.6 Technical Data

Note: For further global specification refer to chapter 4.

Inputs:
Number of analog inputs 6
Connection technology ..... 2/3-wire (supports sensor power supply)
for 2-420, 2-421*:*
Type ..... voltage
Input range ..... nom. 0...10V (full ADC approx. 0...11.4V , max. 20V)
Input resistance ..... approx. 100kOhm
for 2-422, 2-423*:*
Type ..... current
Input range ..... nom. 0...20mA (full ADC aprox. 0...23.3mA, max. 30mA)
Input resistance ..... approx. 175Ohm
Resolution ..... 10 Bit, 0.1% (related on measure range)
Linearity..... 0.2% (related on measure range)
Accuracy ..... 0.5% (related on measure range) after calibration
Filter..... hardware, 1st order, $f_{cut\ off}$ = approx. 100Hz

Number of temperature inputs.. 2
Connection technology ..... 2-wire (supports shield)
for 2-420, 2-422*:*
Type KTY81-2k
Input range ..... nom. 0...50°C (full ADC approx. - 03...65°C)
Measure current ..... approx. 0.6 mA
for 2-421, 2-423*:*
Type PT1000
Input range ..... nom. 0...50°C
Measure current ..... approx. 0.6 mA
Resolution ..... 10 Bit, 0.1% (related on measure range)
Linearity..... 0.2% (related on measure range)
Accuracy ..... 0.5% (related on measure range) after calibration
Filter..... hardware, 1st order, $f_{cut\ off}$ = approx. 100Hz
Linearization ..... must be done in application software

Others:
Bus power consumption..... sensor supply@24V, <10mA@3.3V
Isolation buses to I/O..... none (important details: consider to chapter 4)
Status indication ..... LEDs for each digital input, output and for the module status

Mechanics:
Terminals (others)..... 2x12, cage clamp Wago250
Connection (others) ..... usable with one litz wire from 0.2 – 0.5 mm²
Dimensions ..... 44 x 72 x 20 mm
Weight ..... approx. 30g

Options:
Plug-in terminals ..... optional available

1.6.7.7 Process Data Image

Out-Userdata **from** Master to Slave total: 0 Bytes			**In**-Userdata **to** Master from Slave total: 16 Bytes		
Byte	Function	rC Assign...	Byte	Function	rC Assign...
	all not used		0,1	Analog Input 1 1..900 Dig. ≡ 0..10 V 175..875 Dig. ≡ 4 ..20 mA	... + eB_W0, 0, ...
			2, 3	Analog Input 2 1..900 Dig. ≡ 0..10 V 175..875 Dig. ≡ 4 ..20 mA	... + eB_W1, 0, ...
			4, 5	Analog Input 3 1..900 Dig. ≡ 0..10 V 175..875 Dig. ≡ 4 ..20 mA	... + eB_W2, 0, ...
			6, 7	Analog Input 4 1..900 Dig. ≡ 0..10 V 175..875 Dig. ≡ 4 ..20 mA	... + eB_W3, 0, ...
			8, 9	Analog Input 5 1..900 Dig. ≡ 0..10 V 175..875 Dig. ≡ 4 ..20 mA	... + eB_W4, 0, ...
			10, 11	Analog Input 6 1..900 Dig. ≡ 0..10 V 175..875 Dig. ≡ 4 ..20 mA	... + eB_W5, 0, ...
			12, 13	Analog Input 7 22..790 Dig. ≡ 0..50 °C	... + eB_W6, 0, ...
			14, 15	Analog Input 8 22..790 Dig. ≡ 0..50 °C	... + eB_W7, 0, ...

Analog Input

-	-	-	-	-	-	AIV9	AIV8
Bit 15							Bit 8

AIV7	AIV6	AIV5	AIV4	AIV3	AIV2	AIV1	AIV0
Bit 7							Bit 0

Bit 9-0 ..... AIV<9:0>: Analog Input Value (Little Endian)
11 1111 1111 = Analog Input Value: 1023
…
00 0000 0000 = Analog Input Value: 0

1.6.7.8 Programming Note

In Addition to the notes in chapter 4, please regard the following:

- Linearization has to be done in the applications software.
- A calibration has to be done in the applications software.
- A conversion from "°C" into "F" has to be done in the application software.
- After every communication all inputs will be updated in the master.
- To stabilize the measurement results, they should be filtered in the application.

1.6.8 G-4Ai4Tmp-0#

4x Analog-Input, 20mA/30V, 2/3-wire
4x Temperature, KTY/PT1000, 2-wire

Modul ID	**2-431, 2-432, 2-433, 2-434, 2-435, 2-436**		
Order No.	**CAE_G-4Ai4Tmp-0# (-p)**		
Terminals	**push-in** (≤ 0.5mm²)	Core	**M16E**
Size	**4 eU** (44mm x 72mm)	BB_{FCP}	**1-1-1**
Variants 0# =	**01:** 0/4..20mA; KTY2k, -10..50°C (2-431) **02:** 0/4..20mA; KTY2k, 0..110°C (2-432) **03:** 0/4..20mA; PT1000, -50..350°C (2-433) **04:** 0..30V; KTY2k, -10..50°C (2-434) **05:** 0..30V; KTY2k, 0..110°C (2-435) **06:** 0..30V; PT1000, -50..350°C (2-436) (others on request)		

1.6.8.1 Brief Description

The module includes four analog inputs and four temperature inputs. Depending on the used variant, the analog input accepts currents from 0/4 mA up to 20 mA and different temperature sensor types and ranges.

For each analog input a terminal with separate ground and +24V (from the bus for sensor supply) is available. Additionally for the temperature inputs a separate ground for a shield is supported.

Note:

The module provides a separate analog ground. The shield can be connected to the bus ground via connecting the two terminals (if sufficient) or can be connected to the earth in your system (recommended).

1.6.8.2 Connectors and Indication-/Operation-Elements0

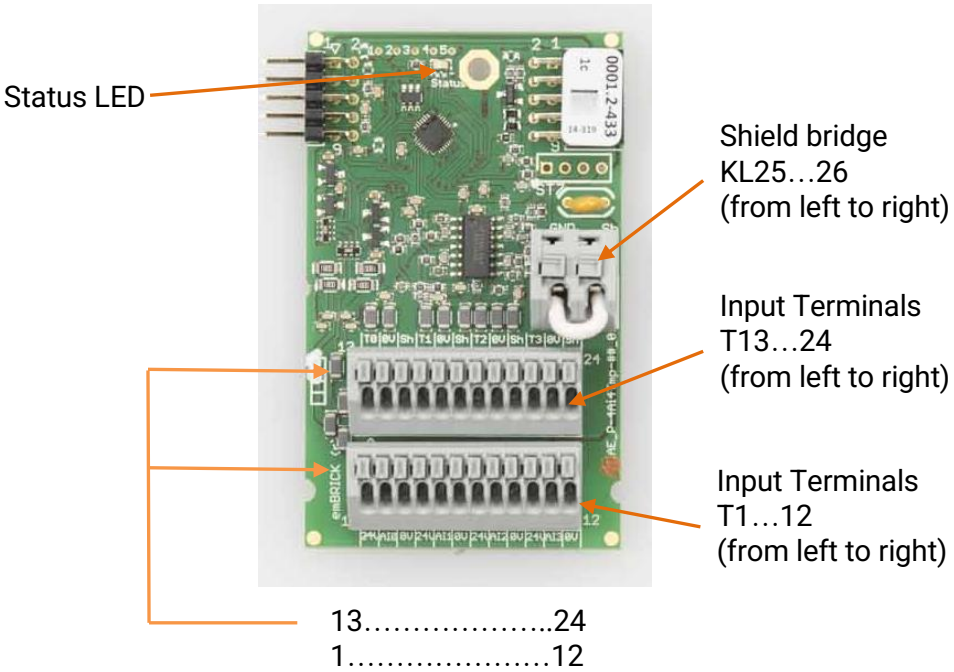

- **Terminal Assignment**

Circuit Example	Ident.	Ter.	Function	Usage	internal simplified diagram
	(lower terminal row)				
	24V	**1**	Analog-Input 1	+24V Supply	
	AI0	**2**		Input	
	0V	**3**		GND	
	24V	**4**	Analog-Input 2	+24V Supply	
	AI1	**5**		Input	
	0V	**6**		GND	
	24V	**7**	Analog-Input 3	+24V Supply	
	AI2	**8**		Input	
	0V	**9**		GND	
	24V	**10**	Analog-Input 4	+24V Supply	
	AI3	**11**		Input	
	0V	**12**		GND	
	(upper terminal row)				
	T0	**13**	Temp.- Input 1	Input	
	0V	**14**		GND	
	Sh	**15**		shield	
	T1	**16**	Temp.- Input 2	Input	
	0V	**17**		GND	
	Sh	**18**		shield	
	T2	**19**	Temp.- Input 3	Input	
	0V	**20**		GND	
	Sh	**21**		shield	
	T3	**22**	Temp.- Input 4	Input	
	0V	**23**		GND	
	Sh	**24**		shield	
	GND	**25**	Shield bridge	GND	
	Sh	**26**		shield	

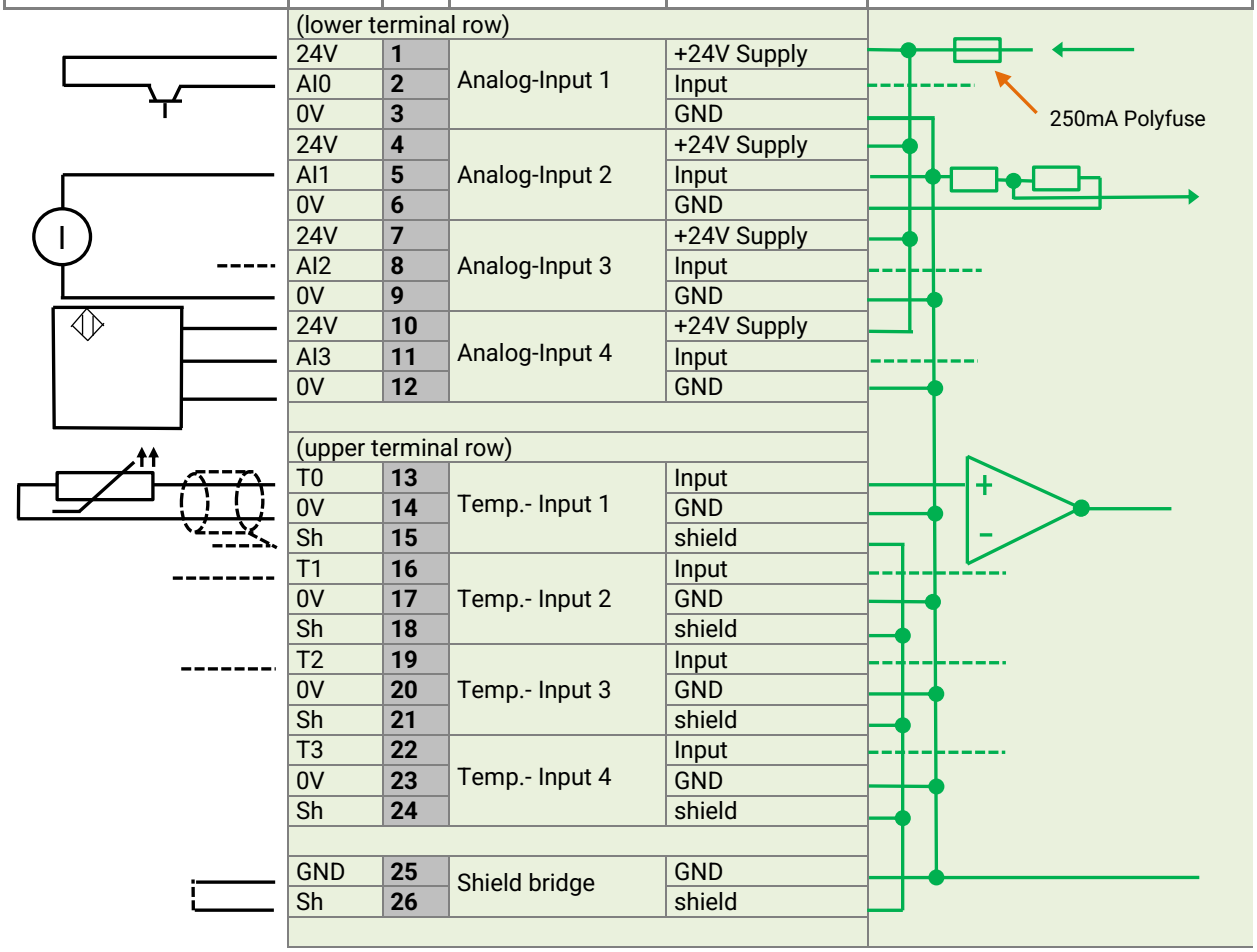

1.6.8.3 LED Indications

Status-LED ..... module status (see **Fehler! Verweisquelle konnte nicht gefunden werden.**)

1.6.8.4 Application Note

In Addition to the notes in chapter 4, please regard the following:

- With the shield bridge you can choose whether you connect the shield directly on GND or connect it over the Sh-pin (26) with PE in your system.
- Make sure that the GND of the analog signals is connected to the 0V terminal. Otherwise the measurement will be less precise.
- The shield of the sensor cable should be connected to Sh.

1.6.8.5 Technical Data

Note: For further global specification refer to chapter 4

Inputs:
Number of analog inputs 4
Connection technology ..... 2/3-wire (supports sensor power supply)
for 2-431 – 2-433
Type ..... current
Input range ..... nom. 0...20mA (full ADC approx. 0...23.3mA, max. 30mA)
Input resistance ..... approx. 175Ohm
for 2-434 – 2-436
Type ..... voltage
Input range ..... nom. 0...30V (full ADC approx. 0...32.02V, max. 35V)
Input resistance ..... approx. 125kOhm
Resolution ..... 10 Bit, 0.1% (related on measure range)
Linearity..... 0.2% (related on measure range)
Accuracy ..... 0.5% (related on measure range)
Filter..... hardware, 1st order, $f_{cut\ off}$ = approx. 100Hz

Number of temperature inputs.. 4
Connection technology ..... 2-wire (plus separate shield)
for 2-431:
Type KTY81-2k
Input range ..... nom. -10...50°C (full ADC approx. - 15...65°C)
Measure current ..... approx. 0.6mA
for 2-432:
Type KTY81-2k
Input range ..... nom. 0...110°C (full ADC approx. - 15...130°C)
Measure current ..... approx. 0.6mA
for 2-433:
Type PT1000
Input range ..... nom. -50...350°C (full ADC approx. -75...380°C)
Input resistance ..... approx. 0.6mA
Resolution ..... 10 Bit, 0.1% (related on measure range)
Linearity..... 0.2% (related on measure range)
Accuracy ..... 0.5% (related on measure range)
Filter..... hardware, 1st order, $f_{cut\ off}$ = approx. 100Hz
Linearization ..... must be done in application software

Others:
Bus power consumption..... sensor supply@24V, <10mA@3.3V
Isolation buses to I/O..... none (important details: consider to chapter 4)
Status indication ..... LEDs for each digital input, output and for the module status

Mechanics:
Terminals (shield bridge)..... 2, cage clamp Wago250
Connection (shield bridge) ..... usable with one litz wire from 0.2 – 1.5 mm²
Terminals (others)..... 2x12, cage clamp Wago250
Connection (others) ..... usable with one litz wire from 0.2 – 0.5 mm²
Dimensions ..... 44 x 72 x 20 mm
Weight ..... approx. 30g

Options:
Plug-in terminals ..... optional available

1.6.8.6 Process Data Image

Out-Userdata **from** Master to Slave total: 0 Bytes			**In**-Userdata **to** Master from Slave total: 16 Bytes		
Byte	Function	rC Assign...	Byte	Function	rC Assign...
none			0, 1	Analog Input 1 0..864 Dig. = 0..20mA	... + eB_W0, 0, ...
			2, 3	Analog Input 2 0..864 Dig. = 0..20mA	... + eB_W1, 0, ...
			4, 5	Analog Input 3 0..864 Dig. = 0..20mA	... + eB_W2, 0, ...
			6 7	Analog Input 4 0..864 Dig. = 0..20mA	... + eB_W3, 0, ...
			8, 9	Temp. Input 1 79..948 Dig. = -10..50°C 106..901 Dig. = 0..110°C PT1000 see notes	... + eB_W4, 0, ...
			10, 11	Temp. Input 2 79..948 Dig. = -10..50°C 106..901 Dig. = 0..110°C PT1000 see notes	... + eB_W5, 0, ...
			12, 13	Temp. Input 3 79..948 Dig. = -10..50°C 106..901 Dig. = 0..110°C PT1000 see notes	... + eB_W6, 0, ...
			14, 15	Temp. Input 5 79..948 Dig. = -10..50°C 106..901 Dig. = 0..110°C PT1000 see notes	... + eB_W7, 0, ...

Analog Input x

-	-	-	-	-	-	AIV9	AIV8
Bit 15							Bit 8

AIV7	AIV6	AIV5	AIV4	AIV3	AIV2	AIV1	AIV0
Bit 7							Bit 0

Bit 9-0 ..... AIV<9:0>: Analog Input Value (Little Endian)
11 1111 1111 = Analog Input Value: 1023
...
00 0000 0000 = Analog Input Value: 0

1.6.8.7 Programming Note

Beside the notes in chapter 4, please regard the following these:

- A calibration has to be done in the applications software.
- A Conversion from °C into °F has to be done in the application software

  Attention: The PT1000 sensor does not have a linear relation between temperature and resistance and needs more than two basepoints. The base points for the calibration are: digits 0 -> 64 -> 128 -> 192 -> 256 -> 320 -> 384 -> 448 -> 512 -> 576 -> 640 -> 704 -> 768 -> 832 -> 896 -> 1000
  And the associated temperature values: -78,276 -> -56,207 -> -33,929 -> -10,714 -> 13,6 -> 38,8 -> 65,217 -> 92,609 -> 121,364 -> 151,429 -> 183,0 -> 215,789 -> 250,556 -> 286,667 -> 325,0 -> 378,571
- After every communication all inputs will be updated
- To stabilize the measurement results, they should be filtered in the application

1.6.9 G-5Ai3Imp-0#

5x Analog-Input, 10V/20mA, 2/3-Wire
3x Pulse-Input, n/p-switch, 2/3-wire

Modul ID	**2-451, 2-452, 2-453, 2-454**		
Order No.	**CAE_G-5Ai3Imp-0# (-p)**		
Terminals	**push-in** (for ≤ 0.5mm²)	Core	**M24E**
Size	**4 eU** (44mm x 72mm)	BB_{FCP}	**1-1-1**
Variants 0# =	**01:** 0..10V, n-switching input (2-451) **02:** 0..10V, p-switching input (2-452) **03:** 0/4..20mA, n-switching input (2-453) **04:** 0/4..20mA, p-switching input (2-454) (others on request)		

1.6.9.1 Brief Description

This module includes 5 analog inputs and 3 pulse inputs.
The analog inputs are voltage or current inputs depending on the variant in use.
The pulse inputs always measure the high time of the signal and frequencies up to 500Hz.

1.6.9.2 Connectors and Indication-/Operation-Elements

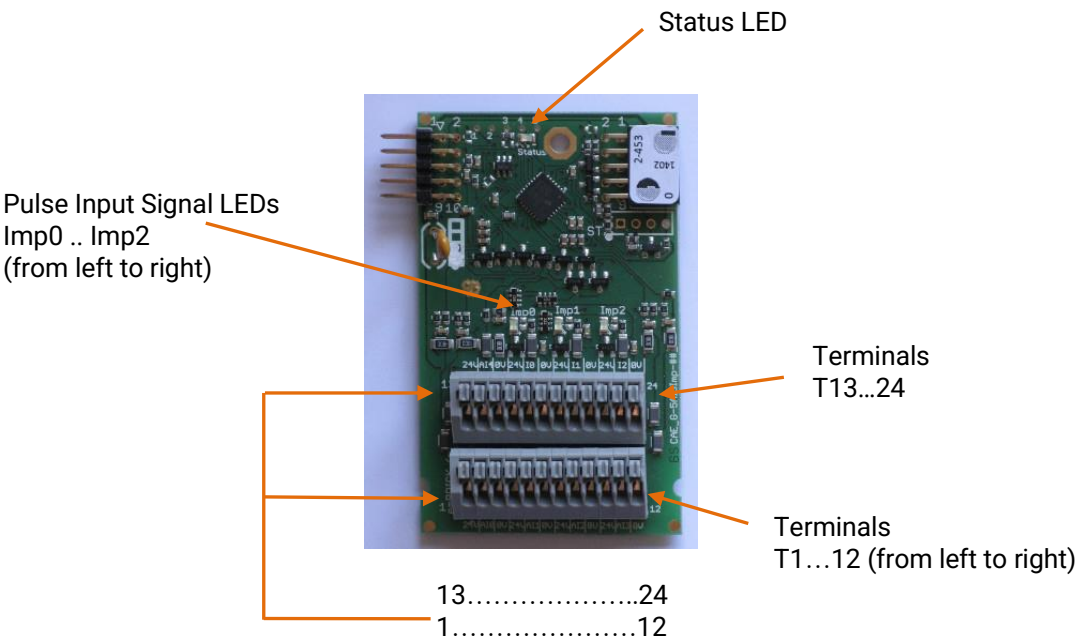

1.6.9.3 Terminal Assignment

Circuit Example	Ident.	Ter.	Function	Usage	internal simplified diagram
	(lower terminal row)				
	24V	1	Analog-Input 1	+24V Supply	
	AI0	2		Input	
	0V	3		GND	
	24V	4	Analog-Input 2	+24V Supply	
	AI1	5		Input	
	0V	6		GND	
	24V	7	Analog-Input 3	+24V Supply	
	AI2	8		Input	
	0V	9		GND	
	24V	10	Analog-Input 4	+24V Supply	
	AI3	11		Input	
	0V	12		GND	
	(upper terminal row)				
	24V	13	Analog-Input 5	+24V Supply	
	AI4	14		Input	
	0V	15		GND	
	24V	16	Pulse Input 1	+24V Supply	
	I0	17		Input	
	0V	18		GND	
	24V	19	Pulse Input 2	+24V Supply	
	I1	20		Input	
	0V	21		GND	
	24V	22	Pulse Input 3	+24V Supply	
	I2	23		Input	
	0V	24		GND	

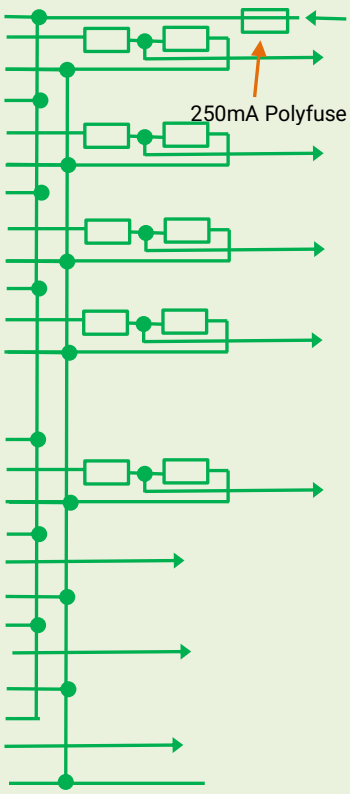

1.6.9.4 LED Indications

IMP0..2 ..... status indication of the Imp0..2 (only active with -01 + -03)
Status-LED ..... module status (see **Fehler! Verweisquelle konnte nicht gefunden werden.**)

1.6.9.5 Application Note

In addition to the notes in chapter **4**, please regard the following:

- The voltage range of the analog inputs (10V variant) can be expanded by an external series resistor in the input line. Therefore the input resistance of the board is exact 104KOhm, the external resistor has to be also 104kOhm for every 10V range expansion. e.g. for a range expansion to 0...50V you have to use a calculated series resistor of 4 x 104kOhm = 416 kOhm (use 390kOhm + 27kOhm of the E12 row). The filter behaviour will not be changed.

1.6.9.6 Technical Data

Note: For further global specification refer to chapter 4, especially the processor clock RC-oscillator deviation and its impact.

Inputs:
Number of analog inputs 5
Connection technology ..... 2/3-wire (supports sensor power supply)
for 2-451, 2-452*:*
Type ..... voltage
Input range ..... nom. 0...10V (full ADC approx. 0...11.8V , max. 20V)
Input resistance ..... approx. 100kOhm
for 2-453, 2-454*:*
Type ..... current
Input range ..... nom. 0...20mA (full ADC approx. 0...22.5mA, max. 30mA)
Input resistance ..... approx. 175Ohm
Resolution ..... 10 Bit, 0.1% (related on measure range)
Linearity..... 0.2% (related on measure range)
Accuracy ..... 0.5% (related on measure range)
Filter..... hardware, 1st order, $f_{cut\ off}$ = approx. 100Hz

Number of pulse inputs 3
Connection technology ..... 2/3-wire (supports sensor power supply)
for 2-451, 2-453*:*
Type ..... n-switching
Threshold low/high ..... approx. 2.6/10,5V
Open input voltage ..... approx. 18V @ internal 24V supply from bus
Pull down current..... approx. 5mA@24V internal supply
sensitivity ..... rising slope (when open input)
for 2-452, 2-454*:*
Type ..... p-switching
Threshold low/high ..... approx. 2.6/10,5V
Input resistance ..... 16 kOhm
sensitivity ..... rising slope (when input voltage > threshold)
Frequency gate time..... 10ms ... 65s
Period measure resolution ..... 1 ... 50ms
Frequency/period counter ..... 16 Bit
Sum counter ..... 14 Bit
Filter..... hardware, 1st order, $f_{cut\ off}$ = approx. 5kHz

Others:
Bus power consumption..... sensor supply@24V, <16mA@3.3V
Isolation buses to I/O..... none (important details: refer to chapter 4)
Status indication ..... LEDs for each pulse input, output and for the module status

Mechanics:
Terminals ..... 2x12, cage clamp Wago250
Connection..... usable with one litz wire from 0.2 – 0.5 mm²
Dimensions ..... 44 x 72 x 20 mm
Weight ..... approx. 30g

Options:
Plug-in terminals ..... optional available

1.6.9.7 Process Data Image

Out-Userdata **from** Master to Slave total: 12 Bytes			**In**-Userdata **to** Master from Slave total: 16 Bytes		
Byte	Function	rC Assign...	Byte	Function	rC Assign...
0, 1			0, 1	Analog Input 1 0..866 Dig. ≡ 0..10 V 183..913 Dig. = 4..20 mA	... + eB_W0, 0, ...
2, 3			2, 3	Analog Input 2 0..866 Dig. ≡ 0..10 V 183..913 Dig. = 4..20 mA	... + eB_W1, 0, ...
4, 5			4, 5	Analog Input 3 0..866 Dig. ≡ 0..10 V 183..913 Dig. = 4..20 mA	... + eB_W2, 0, ...
6, 7			6, 7	Analog Input 4 0..866 Dig. ≡ 0..10 V 183..913 Dig. = 4..20 mA	... + eB_W3, 0, ...
8, 9			8, 9	Analog Input 5 0..866 Dig. ≡ 0..10 V 183..913 Dig. = 4..20 mA	... + eB_W4, 0, ...
10, 11	Pulse Input Control 1	... + eB_W5, 0, ...	10, 11	Pulse Input Sum 1	... + eB_W5, 0, ...
12, 13	Pulse Input Attribute 1	... + eB_W6, 0, ...	12, 13	Pulse Input Difference 1	... + eB_W6, 0, ...
14, 15	Pulse Input Control 2	... + eB_W7, 0, ...	14, 15	Pulse Input Sum 2	... + eB_W7, 0, ...
16, 17	Pulse Input Attribute 2	... + eB_W8, 0, ...	16, 17	Pulse Input Difference 2	... + eB_W8, 0, ...
18, 19	Pulse Input Control 3	... + eB_W9, 0, ...	18, 19	Pulse Input Sum 3	... + eB_W9, 0, ...
20, 21	Pulse Input Attribute 3	... + eB_W10, 0, ...	20, 21	Pulse Input Difference 3	... + eB_W10, 0, ...
			22	Module-Inputs	... + eB_B22, 0, ...

Pulse Input Control x

MODE5	MODE4	MODE3	MODE2	MODE1	MODE0	MSET9	MSET8
Bit 15							Bit 8

MSET7	MSET6	MSET5	MSET4	MSET3	MSET2	MSET1	MSET0
Bit 7							Bit 0

Bit 15-10 ..... MODE<4:0>: Pulse Input operating Mode
110010 = Mode Period Duration with Time Grid 50ms
110001 = Mode Period Duration with Time Grid 49ms
…
000010 = Mode Period Duration with Time Grid 2ms
000001 = Mode Period Duration with Time Grid 1ms
000000 = Mode Fixed Gate Time

Bit 9-0 ..... MSET<9:0>: Mode Settings
in Mode “Period Duration”: Filter Period in ms, to filter out contact chattering (Little Endian):
11 1111 1111 = Filter Period 1023ms
…
00 0000 0000 = Filter Period 0ms
in Mode “Fixed Gate Time”:
Mode Settings has no effect

Pulse Input Attribute x

ATTR15	ATTR14	ATTR13	ATTR12	ATTR11	ATTR10	ATTR9	ATTR8
Bit 15							Bit 8

ATTR7	ATTR6	ATTR5	ATTR4	ATTR3	ATTR2	ATTR1	ATTR0
Bit 7							Bit 0

Bit 15-0: ..... ATTR<15:0>: Additional Pulse Input Attributes
in Mode “Period Duration”: Timeout for 0-setting (Little Endian):
1111 1111 1111 1111 = 65535 * Time Grid
…
0000 0000 0000 0000 = 0
in Mode “Fixed Gate Time”: Gate Time in ms (Little Endian):
1111 1111 1111 1111 = 65535ms
…
0000 0000 0000 0000 = 0ms

Analog Input x

-	-	-	-	-	-	AIV9	AIV8
Bit 15							Bit 8

AIV7	AIV6	AIV5	AIV4	AIV3	AIV2	AIV1	AIV0
Bit 7							Bit 0

Bit 9-0 ..... AIV<9:0>: Analog Input Value (Little Endian)
11 1111 1111 = Analog Input Value: 1023
…
00 0000 0000 = Analog Input Value: 0

Pulse Input Sum x

TR1	TR0	PISV13	PISV12	PISV11	PISV10	PISV9	PISV8
Bit 15							Bit 8

PISV7	PISV6	PISV5	PISV4	PISV3	PISV2	PISV1	PISV0
Bit 7							Bit 0

Bit 15-14..... TR<1:0>: Time Reference; 2 Bit Counter that counts up every millisecond. Can be used to compensate the clock deviation of the *emBRICK®*-module.

Bit 13-0 ..... Pulse Input Sum Value; Increments on falling edge; Resets to zero on overflow (Little Endian):
11 1111 1111 1111 = 16383
…
00 0000 0000 0000 = 0

Pulse Input Difference x

PIDV15	PIDV14	PIDV13	PIDV12	PIDV11	PIDV10	PIDV9	PIDV8
Bit 15							Bit 8

PIDV7	PIDV6	PIDV5	PIDV4	PIDV3	PIDV2	PIDV1	PIDV0
Bit 7							Bit 0

Bit 15-0 ..... PIDV<15:0>: Pulse Input Difference Value
in Mode “Fixed Gate Time”:
Displays all fallen edges monitored in the timeframe defined in Pulse Input Attribute x

Module Inputs

Imp3	Imp2	Imp1	DI5	DI4	DI3	DI2	DI1
Bit 7							Bit 0

Bit7-6 ..... Imp<3:1>: Impulse Imput
Digital Value of the Impulse input
1: State of the Impulse Input is high
0: State of the Impulse Input is low

Bit 4-0 ..... DI<5:1>: Digital Input
Digital Value of the Analog Input
1: Ai value is over 600 Digits
0: Ai value is under 400 Digits

1.6.9.8 Programming Note

In addition to the notes in chapter **4**, please regard the following:

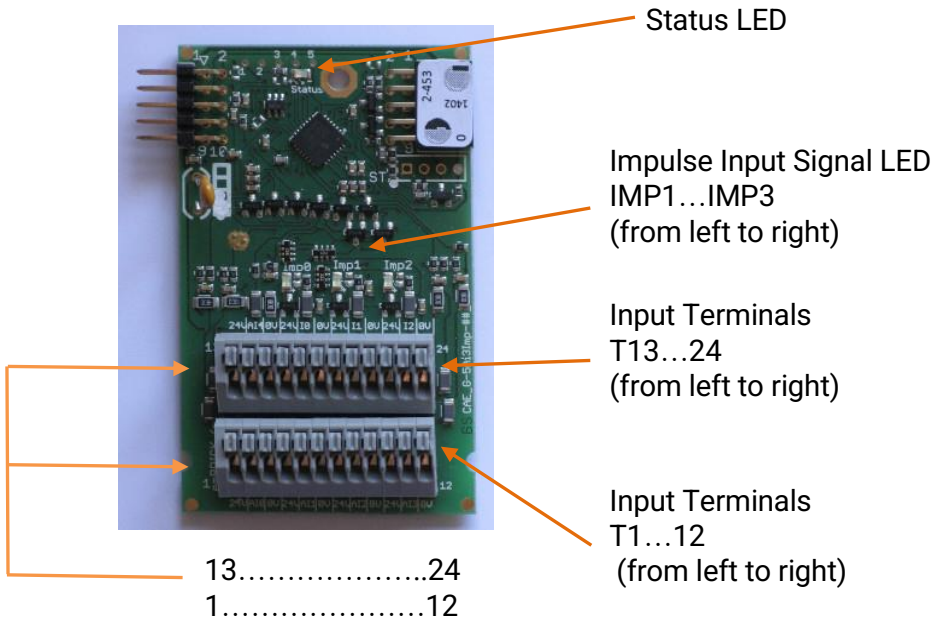

1.6.10 G-5Ai3Dcyc-0#

5x Analog-Input, 2.5V/20mA, 2/3-wire
3x DutyCycle-Inputs

Modul ID	**2-461, 2-462, 2-463, 2-464**		
Order No.	**CAE_G-5Ai3Dcyc-0# (-p)**		
Terminal	**push-in** (for ≤ 0.5mm²)	Core	**M24E**
Size	**4 eU** (44mm x 72mm)	BB_{FCP}	**1-1-1**
Variants 0# =	**01:** 0..2.5V, n-switching input (2-461) **02:** 0..2,5V, p-switching input (2-462) **03:** 0/4..20mA, n-switching input (2-463) **04:** 0/4..20mA, p-switching input (2-464) (others on request)		

1.6.10.1 Brief Description

This module includes 5 analog inputs and 3 pulse inputs.

The analog inputs are voltage and current inputs depending on the variant used. The input range is up to 2.5V or 20mA. Different analog acquisition modes are available such as: direct, minimum, maximum, average.

The pulse inputs always measure the high time of the signal and frequencies up to 500Hz.

1.6.10.2 Connectors and Indication-/Operation-Elements

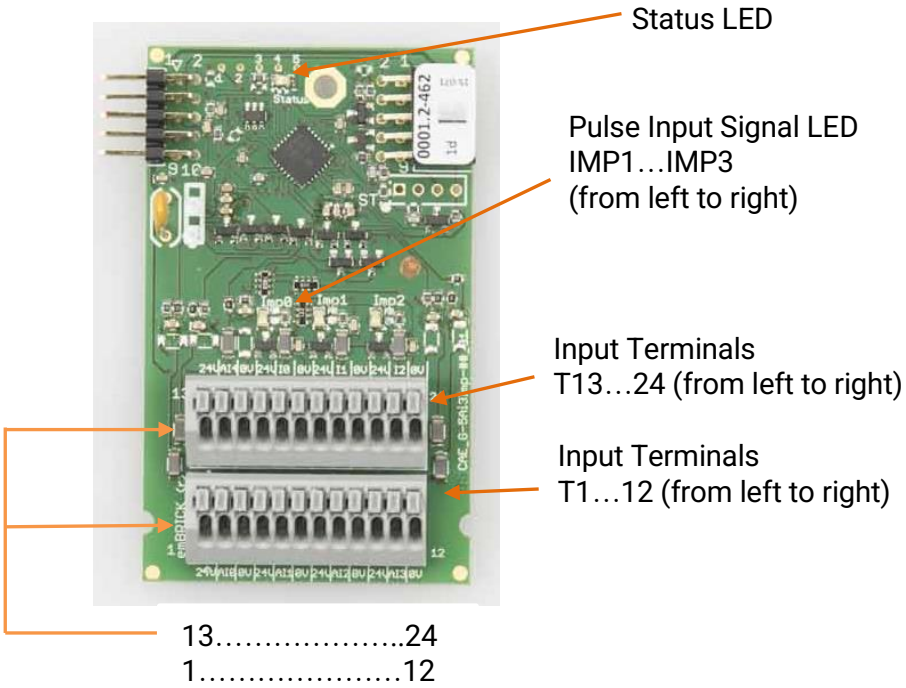

1.6.10.3 Terminal Assignment

Circuit Example	Ident.	Ter.	Function	Usage	internal simplified diagram
	(lower terminal row)				
	24V	1	Analog-Input 1	+24V Supply	
	AI0	2		Input	
	0V	3		GND	
	24V	4	Analog-Input 2	+24V Supply	
	AI1	5		Input	
	0V	6		GND	
	24V	7	Analog-Input 3	+24V Supply	
	AI2	8		Input	
	0V	9		GND	
	24V	10	Analog-Input 4	+24V Supply	
	AI3	11		Input	
	0V	12		GND	
	(upper terminal row)				
	24V	13	Analog-Input 5	+24V Supply	
	AI4	14		Input	
	0V	15		GND	
	24V	16	Pulse Input 1	+24V Supply	
	I0	17		Input	
	0V	18		GND	
	24V	19	Pulse Input 2	+24V Supply	
	I1	20		Input	
	0V	21		GND	
	24V	22	Pulse Input 3	+24V Supply	
	I2	23		Input	
	0V	24		GND	

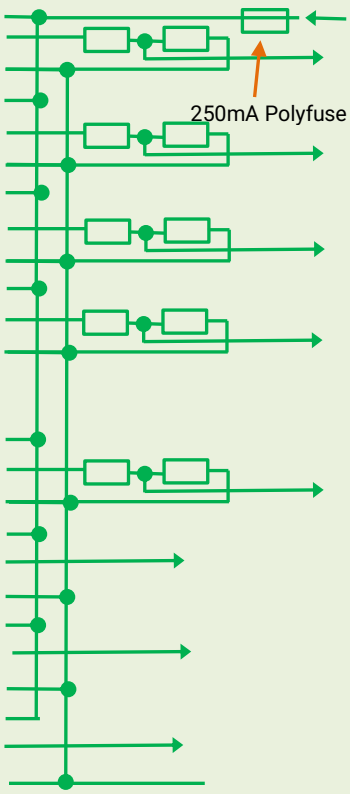

1.6.10.4 LED Indications

IMP0..2 ..... status indication of the Imp0..2 (only active with -01 + -03)
Status LED ..... module status (see **Fehler! Verweisquelle konnte nicht gefunden werden.**)

1.6.10.5 Application Note

In addition to the notes in chapter 4, please regard the following:

- The voltage range of the analog inputs (10V variant) can be expanded by an external series resistor in the input line. Therefore the input resistance of the board is exact 104KOhm, the external resistor has to be also 104kOhm for every 10V range expansion. e.g. for a range expansion to 0...50V you have to use a calculated series resistor of 4 x 104kOhm = 416 kOhm (use 390kOhm + 27kOhm of the E12 row). In this case the filter behaviour will be 20% slower.

1.6.10.6 Technical Data

Inputs:
Number of analog inputs 5
Connection technology ..... 2/3-wire (supports sensor power supply)
for 2-461, 2-462*:*
Type ..... voltage
Input range ..... nom. 0...2.5V (full ADC approx. 0...2,75V, max. 10V)
Input resistance ..... approx. 200kOhm (if < 3.3V)
for 2-463, 2-464*:*
Type ..... current
Input range ..... nom. 0...20mA (full ADC approx. 0...22.5mA, max. 30mA)
Input resistance ..... approx. 175Ohm
Resolution ..... 10 Bit, 0.1% (related on measure range)
Linearity..... 0.2% (related on measure range)
Accuracy ..... 0.5% (related on measure range)
Acquisition modes ..... direct, minimum, maximum, average
Filter..... hardware, 1st order, $f_{cut\ off}$ = approx. 100Hz

Number of pulse inputs 3
Connection technology ..... 2/3-wire (supports sensor power supply)
for 2-461, 2-463*:*
Type ..... n-switching
Threshold low/high ..... approx. 0,7/2,9V
Open input voltage ..... approx. 20V @ internal 24V supply from bus
Pull down current..... approx. 5mA@24V internal supply
sensitivity ..... upper level (when open input)
for 2-462*:*
Type ..... p-switching
Threshold low/high ..... approx. 0,7/2,9V
Input resistance ..... 200 kOhm
sensitivity ..... upper level (when input voltage > threshold)
Capture counter..... 16 Bit
Measure ranges..... 4
Measure resolution 0.0625µs, 0.5µs, 4µs, 16µs
max. periode duration ..... approx. 4ms, 32ms, 262ms, 2097ms
Filter..... hardware, 1st order, $f_{cut\ off}$ = approx. 1MHz

Others:
Bus power consumption..... sensor supply@24V, <16mA@3.3V
Isolation buses to I/O..... none (important details: consider to chapter 4)
Status indication ..... LEDs for each pulse input, output and for the module status

Mechanics:
Terminals ..... 2x12, cage clamp Wago250
Connection..... usable with one litz wire from 0.2 – 0.5 mm²
Dimensions ..... 44 x 72 x 20 mm
Weight ..... approx. 30g

Options:
Plug-in terminals ..... optional available

1.6.10.7 Process Data Image

Organisation of the user data communicated via brickBUS:

Out-Userdata **from** Master to Slave total: 16 Bytes			**In**-Userdata **to** Master from Slave total: 17 Bytes		
Byte	Function	rC Assign...	Byte	Function	rC Assign...
0	Analog Input Control 1	... + eB_W0, 0, ...	0, 1	Analog - Input 1 0..930 Dig. ≡ 0..2,5 V 183..913 Dig. ≡ 4..20 mA	... + eB_W0, 0, ...
2	Analog Input Control 2	... + eB_W1, 0, ...	2, 3	Analog - Input 2 0..930 Dig. ≡ 0..2,5 V 183..913 Dig. ≡ 4..20 mA	... + eB_W1, 0, ...
4	Analog Input Control 3	... + eB_W2, 0, ...	4, 5	Analog - Input 3 0..930 Dig. ≡ 0..2,5 V 183..913 Dig. ≡ 4..20 mA	... + eB_W2, 0, ...
6	Analog Input Control 4	... + eB_W3, 0, ...	6, 7	Analog - Input 4 0..930 Dig. ≡ 0..2,5 V 183..913 Dig. ≡ 4..20 mA	... + eB_W3, 0, ...
8	Analog Input Control 5	... + eB_W4, 0, ...	8, 9	Analog - Input 5 0..930 Dig. ≡ 0..2,5 V 183..913 Dig. ≡ 4..20 mA	... + eB_W4, 0, ...
10, 11	Duty-Input 1 - control usage see below.	... + eB_W5, 0, ...	10, 11	Duty-Input 1 - Duty Value usage see below.	... + eB_W5, 0, ...
12, 13	Duty-Input 2 - control usage see below.	... + eB_W6, 0, ...	12, 13	Duty-Input 2 - Duty Value usage see below.	... + eB_W6, 0, ...
14, 15	Duty-Input 3 - control usage see below.	... + eB_W7, 0, ...	14, 15	Duty-Input 3 - Duty Value usage see below.	... + eB_W7, 0, ...
16	not used		16, 17	Module-Inputs usage see below.	... + eB_W8, 0, …

Analog Input Control x

0	0	0	SAMP4	SAMP3	SAMP2	SAMP1	SAMP0
Bit 15							Bit 8

-	-	-	-	-	-	MODE1	MODE0
Bit 7							Bit 0

Bit 12-8 ..... SAMP<4:0>: number of samples (1... 32) used for pre-processing, depending on the acquisition mode. Samples are taken every millisecond.
11111 = Module takes 32 samples
11110 = Module takes 31 samples
….
00001 = Module takes 2 samples
00000 = Module takes 1 sample

Bit 1-0 ..... MODE<1:0>: Acquisition Mode
11 = output average value over all samples taken
10 = output maximum value of all samples taken
01 = output minimum value of all samples taken
00 = output direct value (SAMP has no effect)

Duty Input Control x

TOD7	TOD6	TOD5	TOD4	TOD3	TOD2	TOD1	TOD0
Bit 15							Bit 8

-	-	-	-	-	-	PS1	PS0
Bit 7							Bit 0

Bit 15-8 ..... TOD<7:0>: Timeout definition:
1111 1111 = 255 * Prescaler * 1ms
…
0000 0001 = 1 * Prescaler * 1ms
0000 0000 = Timeout deactivated

Bit 1-0 ..... PS<1:0>: Prescaler (see Table below):
11 = 256
10 = 64
01 = 8
00 = 1

PS	Prescaler value	Period [ms]	Accuracy [us]	Resolution
0	1	4.096	0.0625	16bit
1	8	32.768	0.5	16bit
2	64	262.144	4	16bit
3	256	2.097.152	16	16bit

Analog Input Control x

SS1	SS0				Imp3	Imp2	Imp1
Bit 15							Bit 8

			DI5	DI4	DI3	DI2	Di1
Bit 7							Bit 0

Bit 7-6 ..... TR<1:0>: Time Reference:
2 Bit Counter that counts up every second. Can be used to compensate the clock deviation of the *emBRICK®*-module.

Bit 2-0 ..... DI<2:0>: Digital Inputs:
actual digital status of the duty inputs 1..3
1 = Input is HIGH
0 = Input is LOW

Bit 4-0 ..... DI<5:1>: Digital Input
Digital Value of the Analog Input
1: Ai value is over 600 Digits
0: Ai value is under 400 Digits

Duty Input Value x

DIV15	DIV14	DIV13	DIV12	DIV11	DIV10	DIV9	DIV8
Bit 15							Bit 8

DIV7	DIV6	DIV5	DIV4	DIV3	DIV2	DIV1	DIV0
Bit 7							Bit 0

Bit 15-0 ..... Duty Input Value: measured High-Time in Timer Ticks (see Prescaler)
1111 1111 1111 1111 = High Time of Pulse is higher than adjusted Period
1111 1111 1111 1110 = High Time of Pulse: 65534 ticks
…
0000 0000 0000 0001 = High Time of Pulse: 1 tick
0000 0000 0000 0000 = No start slope detected within the timeout

Module Inputs

TR1	TR0	-	-	-	DIV2	DIV1	DIV0
Bit 15							Bit 8
-	-	-	DI5	DI4	DI3	DI2	DI1
Bit 7							Bit 0

Bit 15-14 ..... TR<1:0>: Time Reference:
2 Bit Counter that counts up every second. Can be used to compensate the clock deviation of the *emBRICK®*-module.

Bit 10-8 ..... DI<2:0>: Digital Inputs:
actual digital status of the duty inputs 1..3
1 = Input is HIGH
0 = Input is LOW

Bit 4-0 ..... DI<5:1>: Digital Input
Digital Value of the Analog Input
1: Ai value is over 600 Digits
0: Ai value is under 400 Digits

1.6.10.8 Programming Note

In addition to the notes in chapter 4, please regard the following:

1.6.11 G-2Mi2Ao-0#

2x Multi-Input, each as:
- digital Input ... OR
- pulse Input (selectable pullup) ... OR
- analog Input 0..10V ... OR
- analog Input 0..20mA (1 channel)

2x Analog-Outputs, 0-20mA/0-10V

Modul ID	**2-470, 2-471, 2-472**		
Order No.	**CAE_G-2Mi2Ao-0# (-p)**		
Terminal	**push-in** (for ≤ 0.5mm²)	Core	**M24**
Size	**3 eU** (33mm x 72mm)	BB_{FCP}	**1-1-1**
Variants 0# =	**01:** both outputs 0..10V (2-470) **02:** one 0..10V, one 0..20mA output (2-471) **03:** both outputs 0..20mA (2-472) (others on request)		

1.6.11.1 Brief Description

This module offers 2 multifunctional inputs and 2 analog outputs. The inputs can be configurated via software as analog inputs (partly voltage (both channel) / current (only one channel) selectable) or as digital/counting inputs. If so both channel supports a software sectable pull up. The outputs are factory configured with solder bridges as voltage or current outputs.

1.6.11.2 Connectors and Indication-/Operation-Elements

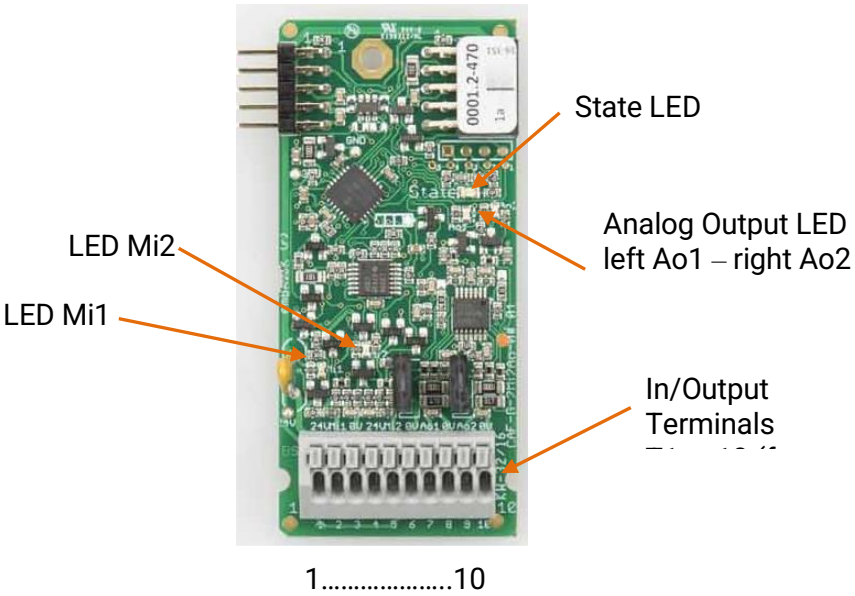

1.6.11.3 Terminal Assignment

Circuit Example	Ident.	Ter.	Function	Usage	internal simplified diagram
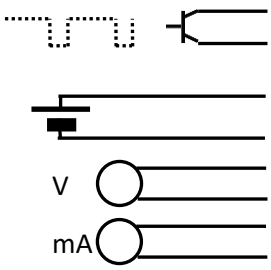	24V	1	Multi-Input 1	+24V Supply	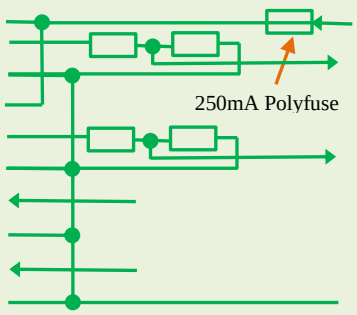
	Mi1	2		Input	
	0V	3		GND	
	24V	4	Multi-Input 2	+24V Supply	
	Mi2	5		Input	
	0V	6		GND	
	Ao1	7	Analog-Output 1	Output	
	0V	8		GND	
	Ao2	9	Analog-Output 2	Output	
	0V	10		GND	

Note: The functionality of the analog outputs (voltage or current) depends on the type of the module/board.

1.6.11.4 LED Indications

Input LED Mi1 + 2 ..... status indication of the digital *Input Mi1 + Mi2*
Output LED Ao1 + 2 ..... status indication of the analog *Output Ao1 + Ao2*
Status LED module status (see **Fehler! Verweisquelle konnte nicht gefunden werden.**)

1.6.11.5 Technical Data

Inputs:

Number of multi inputs 2
Connection technology ..... 2/3-wire (supports sensor power supply)
for current input: (only Mi1)
Input range ..... nom. 0...20mA (full ADC approx. 0...23.3mA, max. 30mA)
Input resistance ..... approx. 100 Ohm
for voltage input:
Input range ..... nom. 0...10V (full ADC approx. 0...10,5V, max. 15)
Input resistance ..... approx. 85kOhm
Resolution ..... 10 Bit, 0.1%
Linearity..... 0.2%
Accuracy 0.5%
Filter..... hardware, 1st order, $f_{cut\ off}$ = approx. 100Hz
for pulse input:
Type..... n-switching
Threshold low/high ..... approx. 5.1 / 5.6V
Open Input voltage ..... approx. 21V @24V internal supply
Pull down current..... approx. 6mA @24V internal supply
Type..... p-switching
Threshold low/high ..... approx. 5.1 / 5.6V
Input resistance ..... approx. 85kOhm
Threshold low/high ..... approx. 1.2 / 1.3V

Outputs:

Number of current outputs 1
Range, nominal ..... 0/4 to 20mA
Maximum current ..... approx. 21mA
Maximum voltage..... > 12V (load < 600 Ω) @24V internal supply

Filter..... hardware, 1st order, $f_{cut\ off}$ = approx. 0.7Hz

Number of voltage outputs..... 1
Range, nominal ..... 0 to 10V
Maximum voltage..... approx. 10.5V
Maximum current ..... > 20mA (load > 500 Ω)
Filter..... hardware, 1st order, $f_{cut\ off}$ = approx. 0.7Hz

Others:
Bus power consumption..... sensor supply + analog Output + 5mA@24V, <30mA@3.3V
Isolation buses to I/O..... none (important details: consider to chapter **4**)
Status indication ..... LEDs for each input, output and for the module status

Mechanics:
Terminals ..... 1 x 10, cage clamp Wago250
Connection..... usable with one litz wire from 0.2 – 0.5 mm²
Dimensions ..... 33 x 72 x 20 mm
Weight ..... approx. 20g

Options:
Plug-in terminals ..... optional available

1.6.11.6 Process Data Image

Out-Userdata **from** Master to Slave total: 13 Bytes			**In**-Userdata **to** Master from Slave total: 13 Bytes		
Byte	Function	rC Assign...	Byte	Function	rC Assign...
0, 1	Analog-Output 1 0...15000 Dig. ≡ 0...20.0 mA or 0...15100 Dig. ≡ 0...10.0 V	... + eB_W0, 0, ...	0, 1	Analog Input 1 0...894 Dig. ≡ 0...20 mA ... or 0...933 Dig. ≡ 0...10 V	... + eB_W0, 0, ...
2, 3	Analog-Output 2 0...15000 Dig. ≡ 0...20.0 mA or 0...15100 Dig. ≡ 0...10.0 V	... + eB_W1, 0, ...	2, 3	Analog Input 2 0...933 Dig. ≡ 0...10 V	... + eB_W1, 0, ...
4, 5	Pulse Input 1 Control usage see below.	... + eB_W2, 0, ...	4, 5	Puls Input Sum 1 usage see below	... + eB_W2, 0, ...
6, 7	Pulse Input 1 Attribute usage see below.	... + eB_W3, 0, ...	6, 7	Puls Input Difference 1 usage see below.	... + eB_W3, 0, ...
8, 9	Pulse Input 2 Control usage see below.	... + eB_W4, 0, ...	8, 9	Puls Input Sum 2 usage see below	... + eB_W4, 0, ...
10, 11	Pulse Input 2 Attribute usage see below.	... + eB_W5, 0, ...	10, 11	Puls Input Difference 2 usage see below.	... + eB_W5, 0, ...
12	Input Mode Control Mi1-Config1 Mi1-Config2 Mi2-Config1	... + eB_B12, 0, 0, ... + eB_B12, 0, 1, ... + eB_B12, 0, 2, ...	12	Input Image Bit 0 = digital status of Inp. 1 Bit 1 = digital status of Inp 2	... + eB_B12, 0, ... + eB_B12, 1, ...

Analog Output x

-	-	AOV13	AOV12	AOV11	AOV10	AOV9	AOV8
Bit 15							Bit 8

AOV7	AOV6	AOV5	AOV4	AOV3	AOV2	AOV1	AOV0
Bit 7							Bit 0

Bit 13-0 ..... AOV<9:0>: Analog Output Value (Little Endian)
11 1010 1001 1000 = 15000 (output 20mA)
…
00 0000 0000 0000 = 0 (output 0mA)

Pulse Input Control x

MODE5	MODE4	MODE3	MODE2	MODE1	MODE0	MSET9	MSET8
Bit 15							Bit 8

MSET7	MSET6	MSET5	MSET4	MSET3	MSET2	MSET1	MSET0
Bit 7							Bit 0

Bit 15-10 ..... MODE<4:0>: Pulse Input operating Mode
110010 = Mode Period Duration with Time Grid 50ms
110001 = Mode Period Duration with Time Grid 49ms
…
000010 = Mode Period Duration with Time Grid 2ms
000001 = Mode Period Duration with Time Grid 1ms
000000 = Mode Fixed Gate Time

Bit 9-0 ..... MSET<9:0>: Mode Settings
in Mode “Period Duration”: Filter Period in ms, to filter out contact chattering (Little Endian):
11 1111 1111 = Filter Period 1023ms
…
00 0000 0000 = Filter Period 0ms

in Mode “Fixed Gate Time”:
Mode Settings has no effect

Pulse Input Attribute x

ATTR15	ATTR14	ATTR13	ATTR12	ATTR11	ATTR10	ATTR9	ATTR8
Bit 15							Bit 8

ATTR7	ATTR6	ATTR5	ATTR4	ATTR3	ATTR2	ATTR1	ATTR0
Bit 7							Bit 0

Bit 15-0: ..... ATTR<15:0>: Additional Pulse Input Attributes
in Mode “Period Duration”: Timeout for 0-setting (Little Endian):
1111 1111 1111 1111 = 65535 * Time Grid
…
0000 0000 0000 0000 = 0
in Mode “Fixed Gate Time”: Gate Time in ms (Little Endian):
1111 1111 1111 1111 = 65535ms
…
0000 0000 0000 0000 = 0ms

Input Mode Control

-	-	-	-	-	MIn3	MIn2	MIn1
Bit 7							Bit 0

Bit 0 ..... Mi1-Config1: mode Input 1
1 = corresponding pullup is ACTIV
0 = corresponding pullup is INACTIV
Bit 1 ..... Mi1-Config2: mode Input 2
1 = corresponding pullup is ACTIV
0 = corresponding pullup is INACTIV
Bit 2 ..... Mi2-Config1: mode Input 3
1 = corresponding pullup is ACTIV
0 = corresponding pullup is INACTIV

				Input Type			
Multi-Input	**Min1** Mi1-Config1	**Min2** Mi1-Config2	**Min3** Mi2-Config1	**Voltage** 0..10V	**Current** 0/4..20mA	**Pulse or Digital-Input**	**Pulse or Digital-Input +** PullUp
1	0	0	x	active	Not active	active	Not active
	0	1	x	Not active	active	Not active	Not active
	1	0	x	Not active	Not active	Not active	Active
	1	1	x	X			
2	x	x	0	active	Not active	active	Not active
	x	x	1	Not active	Not active	Not active	Active

X = not permitted

Analog Input x

-	-	-	-	-	-	AIV9	AIV8
Bit 15							Bit 8

AIV7	AIV6	AIV5	AIV4	AIV3	AIV2	AIV1	AIV0
Bit 7							Bit 0

Bit 9-0 ..... AIV<9:0>: Analog Input Value (Little Endian)
11 1111 1111 = Analog Input Value: 1023
…
00 0000 0000 = Analog Input Value: 0

Pulse Input Sum x

TR1	TR0	PISV13	PISV12	PISV11	PISV10	PISV9	PISV8
Bit 15							Bit 8

PISV7	PISV6	PISV5	PISV4	PISV3	PISV2	PISV1	PISV0
Bit 7							Bit 0

Bit 15-14..... TR<1:0>: Time Reference; 2 Bit Counter that counts up every millisecond. Can be used to compensate the clock deviation of the *emBRICK®*-module.

Bit 13-0 ..... Pulse Input Sum Value; Increments on falling edge; Resets to zero on overflow (Little Endian):
11 1111 1111 1111 = 16383
…
00 0000 0000 0000 = 0

Pulse Input Difference x

PIDV15	PIDV14	PIDV13	PIDV12	PIDV11	PIDV10	PIDV9	PIDV8
Bit 15							Bit 8

PIDV7	PIDV6	PIDV5	PIDV4	PIDV3	PIDV2	PIDV1	PIDV0
Bit 7							Bit 0

Bit 15-0 ..... PIDV<15:0>: Pulse Input Difference Value
in Mode “Fixed Gate Time”:
Displays all fallen edges monitored in the timeframe defined in Pulse Input Attribute x

Input Image

-	-	-	-	-	-	SAI	SC
Bit 7							Bit 0

Bit 1 ..... SAI: digital Status of Analog Input 1
1 = Corresponding Input is HIGH
0 = Corresponding Input is LOW

Bit 0 ..... SC: digital Status of Counter
1 = Corresponding Input is OPEN
0 = Corresponding Input is CLOSED

1.6.11.7 Programming Note

In addition to the notes in chapter **4**, please regard the following:

- The Multi-Inputs must both be configured the same way, either both as digital input or both as analog input, otherwise the measured value of the analog input will be wrong due to crosstalk / interference between the two input channels.
- Make sure that only after the initialization or startup of the application the multi inputs should be change the selected state.

1.6.12 G-RelMiAo-01

1x Relay-Output, CO, potential free
1x Multi-Input, each as:
- digital Input ... OR
- pulse Input (selectable pullup) ... OR
- analog Input 0..10V ... OR
- analog Input 0..20mA (1 channel)

1x Analog-Outputs, 0-20mA/0-10V

Module ID	**2-473, 2-474**		
Order No.	**CAE_G-RelMiAo-0# (-p)**		
Terminals	**push-in** (≤ 0.5mm²)	Core	**M24A**
Size	**3 eU** (33mm x 72mm)	BB_{FCP}	**1-1-1**
Variants	**01:** output is 0..10V (2-473) **02:** output is 0..20mA (2-474)		

1.6.12.1 Brief Description

As a universal small supplement brick this module offers 1 potential-free relay change-over contact using up to 240Vac and one analog output. Moreover it contains a multi input to use as an analog, digital or impulse channel (configured by software).

1.6.12.2 Connectors and Indication-/ Operation-Elements

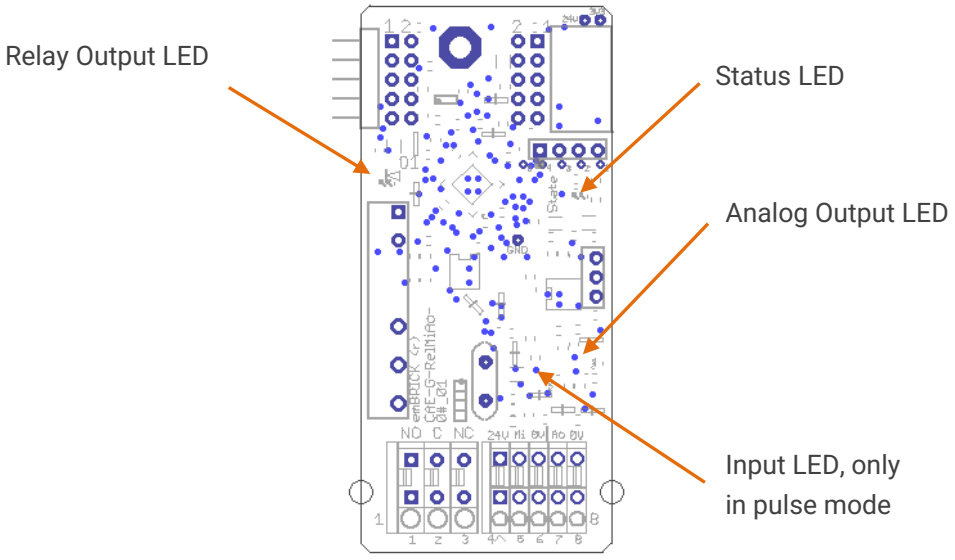

Terminals 1 2 3 4.....8

1.6.12.3 Terminal Assignment

Circuit Example	Ident.	Ter.	Function	Usage	internal simplified diagram
	NO	**1**	Relay	Normally Open	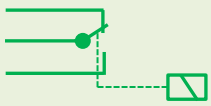
	C	**2**		Common	
	NC	**3**		Normally Closed	
	24V	**4**	Multi-Input	+24V Sens-Sup.	
	Mi	**5**		Input	
	0V	**6**		GND	
	Ao	**7**	Analog Output	Output	
	0V	**8**		GND	

1.6.12.4 LED Indications

Input LED ..... status indication of the input (only in pulse mode)
Relay Output LED ..... status indication of the relay
Analog Output LED ..... status indication of the analog output
Status LED ..... module status (see **Fehler! Verweisquelle konnte nicht gefunden werden.**)

1.6.12.5 Application Note

In addition to the notes in chapter 4, please regard the following:

- The sensor supply is protected by a 0.2A polyfuse.

1.6.12.6 Technical Data

Note: For further global specification refer to chapter 4

Inputs:

Number of multi inputs 1
Connection technology ..... 2/3-wire (supports sensor power supply)
for current input: (only Mi1)
Input range ..... nom. 0...20mA (full ADC approx. 0...23.3mA, max. 30mA)
Input resistance ..... approx. 100 Ohm
for voltage input:
Input range ..... nom. 0...10V (full ADC approx. 0...10,5V, max. 15)
Input resistance ..... approx. 85kOhm
Resolution ..... 10 Bit, 0.1%
Linearity..... 0.2%
Accuracy 0.5%
Filter..... hardware, 1st order, $f_{cut\ off}$ = approx. 100Hz
for pulse input:
Type..... n-switching
Threshold low/high ..... approx. 5.1 / 5.6V
Open Input voltage ..... approx. 21V @24V internal supply
Pull down current..... approx. 6mA @24V internal supply
Type..... p-switching
Threshold low/high ..... approx. 5.1 / 5.6V
Input resistance ..... approx. 85kOhm
Threshold low/high ..... approx. 1.2 / 1.3V

Outputs: 1 current **or** 1 voltage output

Number of current outputs 1
Range, nominal ..... 0/4 to 20mA
Maximum current ..... approx. 21mA
Maximum voltage..... > 12V (load < 600 Ω) @24V internal supply
Filter..... hardware, 1st order, $f_{cut\ off}$ = approx. 0.7Hz

Number of voltage outputs..... 1
Range, nominal ..... 0 to 10V
Maximum voltage..... approx. 10.5V
Maximum current ..... > 20mA (load > 500 Ω)
Filter..... hardware, 1st order, $f_{cut\ off}$ = approx. 0.7Hz

Output:

Number of Relays CO..... 1 (change over, each with 3 terminal)
Type..... isolated
Switching voltage ..... max. 230Vac / 24Vdc
Switching current ..... max. 6A ac/dc, for details refer to the LYCA024V datasheet. The terminal blocks rated VDE 250V/3A, UL 300V/6A. The user have to install an appropriate fuse in the supply line of the relays.
Permanent load ..... max. 4 Aac/dc
Lifetime ..... refer to the LYCA024V datasheet

Others:

Separate supply voltage ..... 24V DC ±10 % (by brickBUS, used for relay supply only)
Bus power consumption..... 0..10mA@24V, <10mA@3.3V

Status indication ..... LEDs for each output and for the module status

Mechanics:
Terminals ..... 1,2,3 cage clamp Wago250, 3,5mm
Connection..... usable with one litz wire from 0,5.– 1.5 mm²
Terminals ..... 4 … 8, cage clamp Wago250, 2.5mm
Connection..... usable with one litz wire from 0.2 – 0.5 mm²
Dimensions ..... 33 x 72 x 20 mm
Weight ..... approx. 25g

Options:
Plug-in terminals ..... optional available

1.6.12.7 Process Data Image

Out-Userdata **from** Master to Slave total: 13 Bytes			**In**-Userdata **to** Master from Slave total: 13 Bytes		
Byte	Function	rC Assign...	Byte	Function	rC Assign...
0, 1	Analog-Output 0...15000 Dig. ≡ 0...20.0 mA or 0...15100 Dig. ≡ 0...10.0 V	... + eB_W0, 0, ...	0, 1	Analog Input 0...894 Dig. ≡ 0...20 mA ... or 0...933 Dig. ≡ 0...10 V	... + eB_W0, 0, ...
2, 3	Pulse Input Control usage see below.	... + eB_W1, 0, ...	2, 3	Puls Input Sum usage see below	... + eB_W1, 0, ...
4, 5	Pulse Input Attribute usage see below.	... + eB_W2, 0, ...	4, 5	Puls Input Difference usage see below.	... + eB_W2, 0, ...
6	Digital-Output Mi1-Config1 Mi1-Config2 Relais	 ... + eB_B6, 0, 0, ... + eB_B6, 0, 1, ... + eB_B6, 0, 2, ...	6	Digital-Input Bit 0 = digital status of Inp.	... + eB_B6, 0, ...

Analog Output

-	-	AOV13	AOV12	AOV11	AOV10	AOV9	AOV8
Bit 15							Bit 8

AOV7	AOV6	AOV5	AOV4	AOV3	AOV2	AOV1	AOV0
Bit 7							Bit 0

Bit 13-0 ..... AOV<9:0>: Analog Output Value (Little Endian)
11 0010 0110 0100 = 12900 (output 20mA)
...
00 0000 0000 0000 = 0 (output 0mA)

Pulse Input Control

MODE5	MODE4	MODE3	MODE2	MODE1	MODE0	MSET9	MSET8
Bit 15							Bit 8

MSET7	MSET6	MSET5	MSET4	MSET3	MSET2	MSET1	MSET0
Bit 7							Bit 0

Bit 15-10 ..... MODE<4:0>: Pulse Input operating Mode
110010 = Mode Period Duration with Time Grid 50ms
110001 = Mode Period Duration with Time Grid 49ms
...
000010 = Mode Period Duration with Time Grid 2ms
000001 = Mode Period Duration with Time Grid 1ms
000000 = Mode Fixed Gate Time

Bit 9-0 ..... MSET<9:0>: Mode Settings
in Mode “Period Duration”: Filter Period in ms, to filter out contact chattering (Little Endian):
11 1111 1111 = Filter Period 1023ms
...
00 0000 0000 = Filter Period 0ms
in Mode “Fixed Gate Time”:
Mode Settings has no effect

Pulse Input Attribute

ATTR15	ATTR14	ATTR13	ATTR12	ATTR11	ATTR10	ATTR9	ATTR8
Bit 15							Bit 8

ATTR7	ATTR6	ATTR5	ATTR4	ATTR3	ATTR2	ATTR1	ATTR0
Bit 7							Bit 0

Bit 15-0: ..... ATTR<15:0>: Additional Pulse Input Attributes
in Mode "Period Duration": Timeout for 0-setting (Little Endian):
1111 1111 1111 1111 = 65535 * Time Grid
…
0000 0000 0000 0000 = 0
in Mode "Fixed Gate Time": Gate Time in ms (Little Endian):
1111 1111 1111 1111 = 65535ms
…
0000 0000 0000 0000 = 0ms

Digital Output

-	-	-	-	-	Rel	MIn2	MIn1
Bit 7							Bit 0

Bit 0 ..... Mi1-Config1: mode Input 1
1 = corresponding pullup is ACTIV
0 = corresponding pullup is INACTIV
Bit 1 ..... Mi1-Config2: mode Input 2
1 = corresponding pullup is ACTIV
0 = corresponding pullup is INACTIV
Bit 2 ..... Relais: Relais Output
1 = activate corresponding Relay
0 = deactivate corresponding Relais

Multi Input Config:

	AI Voltage	AI Current	Pulse	Pulse + Pullup
MI1-Config1	INACTIV	INACTIV	INACTIV	ACTIV
MI1-Config2	INACTIV	ACTIV	INACTIV	INACTIV

Analog Input

-	-	-	-	-	-	AIV9	AIV8
Bit 15							Bit 8

AIV7	AIV6	AIV5	AIV4	AIV3	AIV2	AIV1	AIV0
Bit 7							Bit 0

Bit 9-0 ..... AIV<9:0>: Analog Input Value (Little Endian)
11 1111 1111 = Analog Input Value: 1023
…
00 0000 0000 = Analog Input Value: 0

Pulse Input Sum

TR1	TR0	PISV13	PISV12	PISV11	PISV10	PISV9	PISV8
Bit 15							Bit 8

PISV7	PISV6	PISV5	PISV4	PISV3	PISV2	PISV1	PISV0
Bit 7							Bit 0

Bit 15-14 ..... TR<1:0>: Time Reference; 2 Bit Counter that counts up every millisecond. Can be used to compensate the clock deviation of the *emBRICK®*-module.

Bit 13-0 ..... Pulse Input Sum Value; Increments on falling edge; Resets to zero on overflow (Little Endian):
11 1111 1111 1111 = 16383
…
00 0000 0000 0000 = 0

Pulse Input Difference

PIDV15	PIDV14	PIDV13	PIDV12	PIDV11	PIDV10	PIDV9	PIDV8
Bit 15							Bit 8

PIDV7	PIDV6	PIDV5	PIDV4	PIDV3	PIDV2	PIDV1	PIDV0
Bit 7							Bit 0

Bit 15-0 ..... PIDV<15:0>: Pulse Input Difference Value in Mode “Fixed Gate Time”:
Displays all fallen edges monitored in the timeframe defined in Pulse Input Attribute x

Digital Input

-	-	-	-	-		-	DI
Bit 7							Bit 0

Bit 0 ..... DI: Read Digital Inputs
1 = Corresponding Input is HIGH
0 = Corresponding Input is LOW

1.6.12.8 Programming Note

In addition to the notes in chapter 4, please regard the following:

- A software generated pseudo PWM is possible till approx. 10Hz (depends on the bus/module update rate).

1.6.13 G-MotDC4Ai-0#

t.b.d.

1.6.14 G-StpDiDoRes-0#

t.b.d.

1.6.15 G-2Stp2Di2Do2A-01

2x Step-Drives
with Clock/ Dir Output
with Current Control Output
2x Digital Input
(i.e. for ref. sensor
2x Digital Output
(i.e. for picker)

Modul ID	**2-522**			
Order No.:	CAE_G-2Stp2Di2Do2A -01			
Terminals	**push-in** (for ≤ 0.5mm²)	Core	**M25A**	
Size	**6 eU** (66mm x 72mm)	BB_{FCP}	**1-1-1**	
Variants	-			

1.6.15.1 Brief Description

This module includes the pulse generation for 2 step drives with external power stages by using a step and direction signal. Moreover 2 digital inputs and 2 digital outputs are available.

1.6.15.2 Connectors and Indication-/Operation-Elements

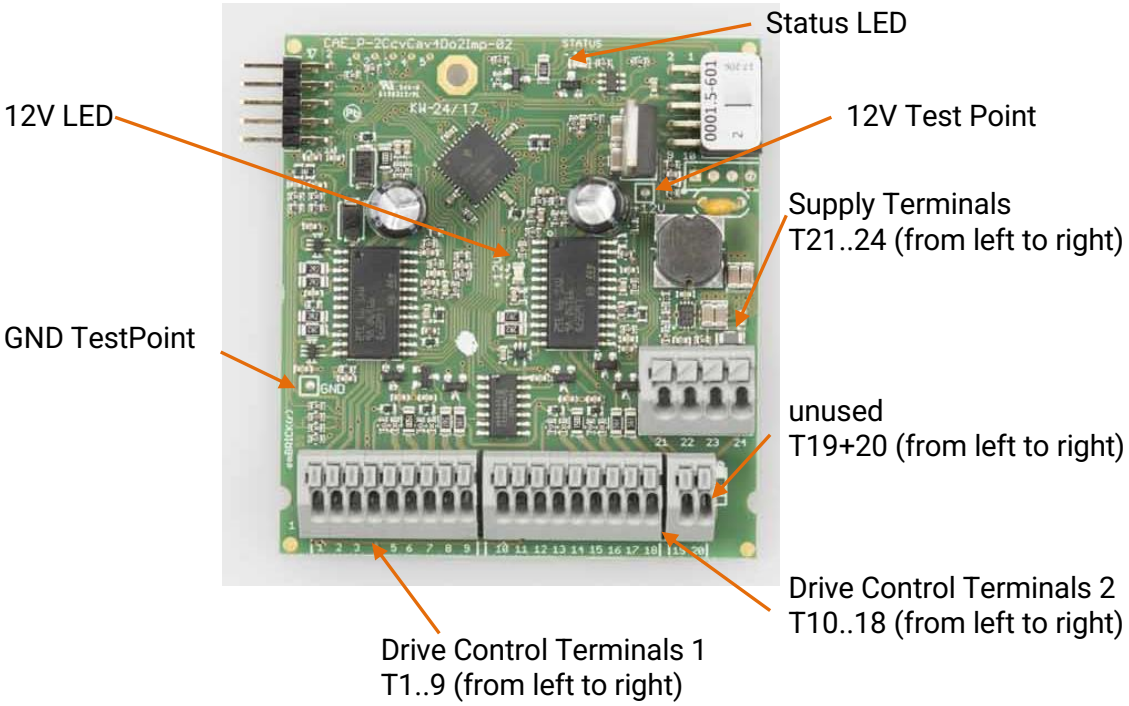

1.6.15.3 Terminal assingment

Circuit Example	Ident.	Ter.	Function	Usage	internal simplified diagram
	(lower terminal row)				
		1	Drive Control 1	unused 1 A	
		2		unused 1 B	
		3		+ 5V	
		4		GND	
		5		Ref.-Sensor 1	
		6		Picker 1	
		7		Pulse 1 Input	
		8		Dir 1	
		9		Step 1	
		10	Drive Control 2	unused 2 A	
		11		unused 2 B	
		12		+ 5V	
		13		GND	
		14		Ref.-Sensor 2	
		15		Picker 2	
		16		Pulse 2 Input	
		17		Dir 2	
		18		Step 2	
		19	unused	unused 3 A	
		20		unused 3 B	
		21	Supply Power	+24V	
		22		GND	
		23		+24V	
		24		GND	

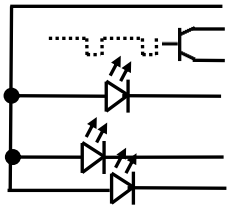

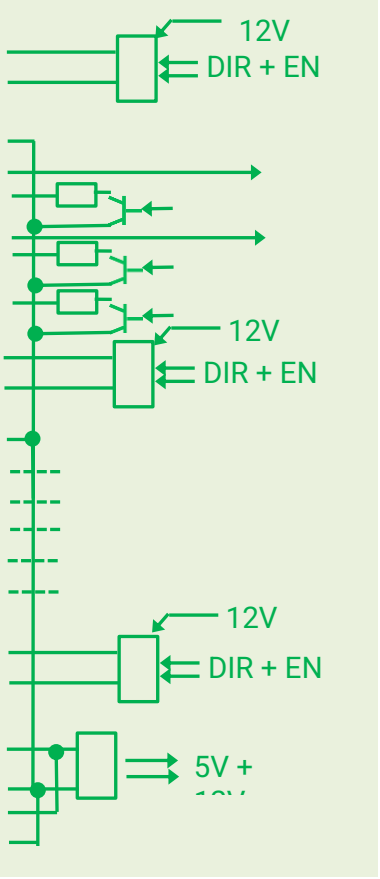

1.6.15.4 LED Indications

Status LED module status (see **Fehler! Verweisquelle konnte nicht gefunden werden.**)
12V LED 12V for motor supply available [ON = yes; OFF = no]

1.6.15.5 Application Note

In addition to the notes in chapter **4**, please regard the following:

1.6.15.6 Process Data Image

Organisation of the user data communicated via brickBUS:

!!! Preliminary Draft Version !!!

Actual the acceleration and speed can be sent to the module at any time but will only get adopted once the motor comes to a complete halt.

Out-Userdata **from** Master to Slave total: 0 Bytes			**In**-Userdata **to** Master from Slave total: 16 Bytes		
Byte	Function	rC Assign...	Byte	Function	rC Assign...
Page 1					
0	Page (here = 0x01)	... + eB_B0, 0, ...	0	Modul Status usage see below	... + eB_B0, 0, ...
1	Communic.Counter usage see below	... + eB_B1, 0, ...	1	I/O Status Bit 0 = dig. input drv1 Bit 1= dig. input drv2	... + eB_B1, 0, ...
2	Control Drv 1	.. + eB_B2, 0, ...	2	Status Drv 1	... + eB_B2, 0, ...
3	Control Drv 2	.. + eB_B3, 0, ...	3	Status Drv 2	... + eB_B3, 0, ...
4, 5	Set Pos Drv 1 HSW	... + eB_W2, 0, ...	4, 5	Act Pos Drv 1 HSW	... + eB_W2, 0, ...
6, 7	Set Pos Drv 1 LSW	... + eB_W3, 0, ...	6, 7	Act Pos Drv 1 LSW	... + eB_W3, 0, ...
8, 9	Set Pos Drv 2 HSW	... + eB_W4, 0, ...	8, 9	Act Pos Drv 2 HSW	... + eB_W4, 0, ...
10, 11	Set Pos Drv 2 LSW	... + eB_W5, 0, ...	10, 11	Act Pos Drv 2 LSW	... + eB_W5, 0, ...
			12, 13	Powersupply Voltage 0....400 Dig. ≡ 0.0 ..40.0 V	... + eB_W6, 0, ...
Page 2					
0	Page (here = 0x02)	... + eB_B0, 0, ...		see Page 1	
1	Communic.Counter usage see below	... + eB_B1, 0, ...			
2, 3	Start Frequ.Drv1 [Hz]	... + eB_W1, 0, ...			
4, 5	End Frequ.Drv1 [Hz]	... + eB_W2, 0, ...			
6, 7	Accelerat.Drv1 [Hz/ms]	... + eB_B6, 0, ...			
8, 9	Start Frequ.Drv2 [Hz]	... + eB_W4, 0, ...			
10, 11	End Frequ.Drv2 [Hz]	... + eB_W5, 0, ...			
12, 13	Accelerat.Drv2 [Hz/ms]	... + eB_B12, 0, ...			
Page 3					
0	Page (here = 0x03)	... + eB_B0, 0, ...		see Page 1	
1	Communic.Counter usage see below	... + eB_B1, 0, ...			
2	Current Stdby Drv1 [%]	... + eB_B2, 0, ...			
3	Current Run Drv1 [%]	... + eB_B3, 0, ...			
4	Current Boost Drv1 [%]	... + eB_B4, 0, ...			
5	Resolution/Decay Drv1 usage see below	... + eB_B5, 0, ...			
6	Current Stdby Drv2 [%]	... + eB_B6, 0, ...			
7	Current Run Drv2 [%]	... + eB_B7, 0, ...			
8	Current Boost Drv2 [%]	... + eB_B8, 0, ...			
9	Resulution/Decay Drv2 usage see below	... + eB_B9, 0, ...			
10 ..13	unused				

Status:

-	-	-					
Bit 7							Bit 0

Bit0 ..... INIT
Bit1 ..... RUN
Bit2 ..... in Slope
Bit3 ..... Dir
Bit4 ..... Error (more: see ...).
Bit7 ..... COM Error

Control:

-	-	-					
Bit 7							Bit 0

Bit Pos	Funktion	Beschreibung							
0	Motor ON	aktiv / bestromt (1= ON, 0=kein Strom)	0	1					
1	Setze Pos	falls 1, wird Act-Pos = Set-Pos gesetzt (sinnvollerweise nur dann wenn Antrieb steht)	-	1	0				
2	Fahre auf Ziel Position	Positioniermodus: Set-Pos. wird perm. angefahren	-	-	1	0			
3	Direction	Links / Rechts [0 / 1] (bei Dauerlauf)	-	-	-	x			
4	Dauerlauf	Bewegt den Motor dauerhaft im Normalspeed	-	-	-	1		0	
5			-	-	-	-	-		
6		Reserved							
7		Fehlerquittierung (solange = 1)	1						

Communic-Counter:

Bit 3 .. 0 ..... Die Erkennung einer Erhöhung um 1 signalisiert dem Modul das konsistente Vorhandensein der restlichen Out Daten und beweirkt eine (einmalige) Übernahme dieser entsprchend dem Kommando-Byte. Andere Veränderungen (also nicht um +1) werden als Kommunikationsfehler gewertet und bewirken keine Datenübernahme sondern das Setzen des ComError Bits im Status.

Currecnts:

Bit 7.. 0 ..... 0 ... 150% Percent of nominal current

Positions (all):

Bit 31...16, 15...0 ..... signed long in (µ)Steps

Resultion/Decay:

-	-	-					
Bit 7							Bit 0

t.b.d.

1.6.17 G-6Rel6Di2Ai2Ri-0#-RB

2x Relay-Output, NO, potential free
4x Relay-Output, CO, potential free
6x Digital-Input, 24V, p-switch, 1-wire
2x Analog-Input, 10V/20mA, 2/3-wire
2x R-Network-Input

Module ID	**2-481, 2-482**		
Order No.	**CAE_G-6Rel6Di2Ai6Ri-0# RB**		
Terminals	**push-in** (≤ 1.5mm²)	Core	**M16G**
Size	**72 x 90 (96) mm**	BB_{FCP}	**2-1-1**
Variants	**01:** 20mA Input (2-481) **02:** 10V Input (2-482)		

1.6.17.1 Brief Description

This brick offers an I/O-mix of 6 relays, 6 digital inputs and analog inputs for 2 voltages/currents and 2 resistors. It is enclosed in a rail box.

1.6.17.2 Connections and Indicators-/Operation Elements

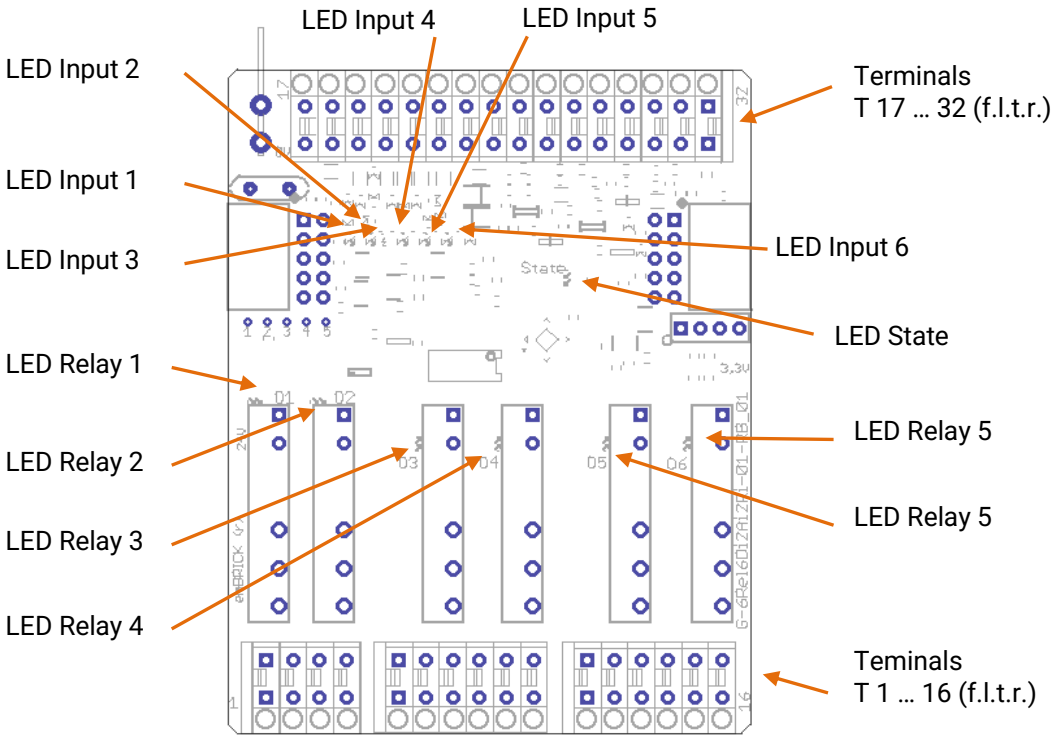

1.6.17.3 Terminal Assignment

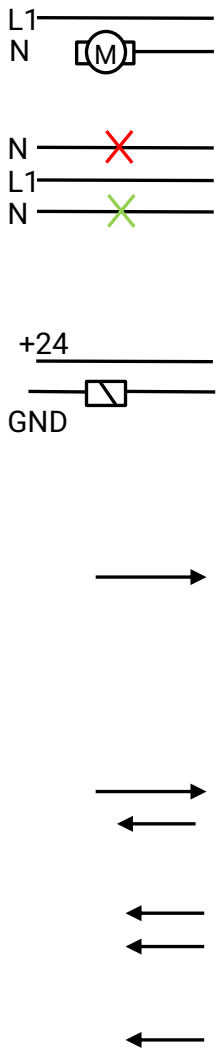

Ident.	Ter.	Function	Usage
(lower terminal row)			
CO1	1	Relay 1	change-over
NO1	2		normally-open
CO2	3	Relay 2	change-over
NO2	4		normally-open
NC3	5	Relay 3	normally-closed
CO3	6		change-over
NO3	7		normally-open
NC4	8	Relay 4	normally-closed
CO4	9		change-over
NO4	10		normally-open
NC5	11	Relay 5	normally-closed
CO5	12		change-over
NO5	13		normally-open
NC6	14	Relay 6	normally-closed
CO6	15		change-over
NO6	16		normally-open
(upper terminal row)			
0V	17	sep. supply	DGND
DI1	18	Input 1	
DI2	19	Input 2	
DI3	20	Input 3	
DI4	21	Input 4	
DI5	22	Input 5	
DI6	23	Input 6	
0V	24	sep. supply	DGND
24V	25	R-Nw-Input 1 Analog-Input 1	+24V Supply
RI1	26		R-Input
AI1	27		analog-Input
0V	28		AGND
24V	29	R-Nw-Input 2 Analog-Input 2	+24V Supply
RI2	30		R-Input
AI2	31		analog-Input
0V	32		AGND

internal simplified diagram

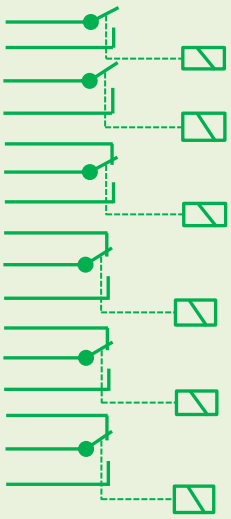

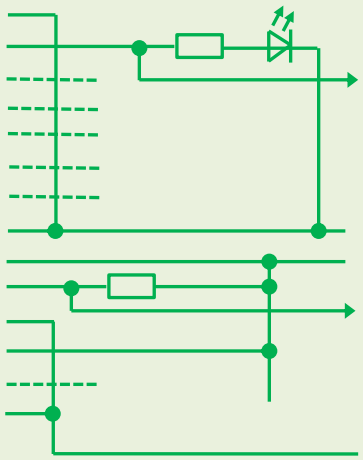

1.6.17.4 LED Indicators

(the LEDs are mounted directly on the PCB and visible by the transparent rail box front)

LED Out1…6.. ..... status indication of the *relay 1…6*
LED In1…6 ..... status indication of the inputs *Input 1..6*
Status-LED ..... module status

1.6.17.5 Application Note

1.6.17.6 Technical Data

Input:

Number of digital inputs 6
- Connection technology ..... 1-wire, common ground
- Type ..... p-switching
- "0" signal voltage ..... -3 ... 5V
- "1" signal voltage ..... 15 ... 30V
- Input current ..... typ. 3mA to 8mA at “1” Signal

Number of analog inputs 2
- Connection technology ..... 2/3-wire (supports sensor power supply)
  - Type ..... current
  - Input range ..... nom. 0...20mA (full ADC approx. 0...22.5mA, max. 30mA)
  - Input resistance ..... approx. 175Ohm
- Resolution ..... 10 Bit, 0.1% (related on measure range)
- Linearity ..... 0.2% (related on measure range)
- Accuracy ..... 0.5% (related on measure range)
- Filter ..... hardware, 1st order, $f_{cut\ off}$ = approx. 100Hz

Number of R-Network inputs 2
- Connection technology ..... 1-wire, common ground
- Type ..... 1k (if closed), 10k (if open) resistor network
- messurement current ..... <1mA
- messurement voltage ..... max. 2,5v
- logical states 4

Output:

Number of Relays NO ..... 2 (normal open, each with 2 terminals)
Number of Relays CO ..... 4 (change over, each with 3 terminal)
- Type ..... isolated
- Switching voltage ..... max. 230Vac / 24Vdc
- Switching current ..... max. 6A ac/dc, for details refer to the LYCA024V datasheet. The terminal blocks rated VDE 250V/3A, UL 300V/6A. The user have to install an appropriate fuse in the supply line of the relays.
- Permanent load ..... max. 4 Aac/dc
- Lifetime ..... refer to the LYCA024V relay datasheet

Others:

Separate supply voltage ..... none
Bus power consumption ..... 0mA@24V, <10mA@3.3V (inactive state)
Isolation Bus to I/O ..... none
Status indication ..... LEDs for each input, output and for the module status

Mechanics:

Terminals ..... 16 + 16 cage clamp Wago series 250, 3.5mm
Connection ..... usable with one litz wire from 0.5 – 1.5 mm²
Dimensions ..... 72 x 96 x 63 mm
Weight ..... approx. 150g

1.6.17.7 Process Data Image

Out-Userdata **from** Master to Slave total: 10 Bytes			**In**-Userdata **to** Master from Slave total: 10 Bytes		
Byte	Function	rC Assign...	Byte	Function	rC Assign...
0	Relay Output 1…6 (REL1..6)	... + eB_B0, 0, ... + eB_B0, 5, ...	0, 1	Analog-Input 1 0...913 Dig. ≡ 0...20 mA ... or 0...866 Dig. ≡ 0...10 V	... + eB_W0, 0, ...
	not used		2, 3	Analog-Input 2 0...913 Dig. ≡ 0...20 mA ... or 0...866 Dig. ≡ 0...10 V	... + eB_W1, 0, ...
	not used		4, 5	R-Network-Input 1 0...131…609...1023 Dig. ≡ 0…1k...10k…∞	... + eB_W2, 0, ...
	not used		6, 7	R-Network-Input 2 0...131…609...1023 Dig. ≡ 0…1k...10k…∞	... + eB_W3, 0, ...
	not used		8	Digital Input 1…6 (DI1..6)	... + eB_B8, 0, ... + eB_B8, 5, ...

Relay Control

-	-	REL6	REL5	REL4	REL3	REL2	REL1
Bit 7							Bit 0

Bit 5-0 ..... REL<6:1>: Relais Output
1 = activate corresponding Relay
0 = deactivate corresponding Relay

Analog Input x (R-Network too)

-	-	-	-	-	-	AIV9	AIV8
Bit 15							Bit 8

AIV7	AIV6	AIV5	AIV4	AIV3	AIV2	AIV1	AIV0
Bit 7							Bit 0

Bit 9-0 ..... AIV<9:0>: Analog Input Value (Little Endian)
11 1111 1111 = Analog Input Value: 1023
…
00 0000 0000 = Analog Input Value: 0

Digital Input

-	-	DI6	DI5	DI4	DI3	DI2	DI1
Bit 7							Bit 0

Bit 5-0 ..... DI<6:1>: Read Digital Inputs
1 = Corresponding Input is HIGH
0 = Corresponding Input is LOW

1.6.18 G-6Ai2Ao2Ai4Tmp-01-RB

6x Analog Input, 4..20mA, 2/3-wire
2x Analog Output, 4..20mA, 2-wire
2x Analog Input, 0..40V, 2/3-wire
4x Temperature, PT1000, 2-wire

Module ID	**2 483, 2 484, 2 485**		
Order No.	**CAE_6Ai2Ao2Ai4Tmp-01 RB**		
Terminals	**push-in** (≤ 1.5mm²)	Core	**M25C**
Size	**72 x 90 (96) mm**	BB_{FCP}	**2-1-1**
Variants	**01:** 2x 10V Output (2-483) **02:** 10V, 20mA Output (2-4842) **03:** 2x 20mA Output (2-485)-		

1.6.18.1 Brief Description

This brick offers an I/O-mix of 6 analog current inputs, 2 analog current outputs. Moreover 2 analog voltage inputs and 4 temperature inputs. It is enclosed in a rail box.

1.6.18.2 Connections and Indication-/Operation Elements

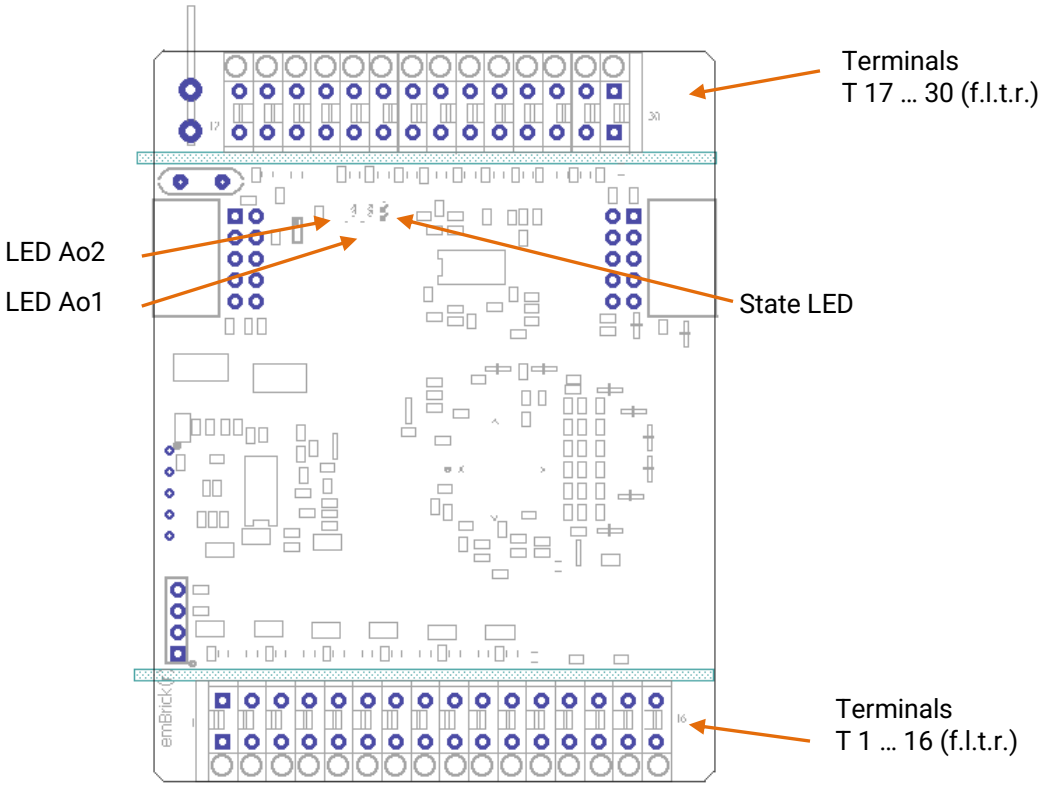

1.6.18.3 Terminal Assignment

Circuit Example	Ident.	Ter.	Function	Usage	internal simplified diagram
	(lower terminal row)				
for current In-/Output: use 0V terminal only when transmit-ter/receiver has no other GND connection	AI1	1	Analog-Input 1 (0/4..20mA)	Input	
	0V	2		GND	
	AI2	3	Analog-Input 2 (0/4..20mA)	Input	
	0V	4		GND	
	AI3	5	Analog-Input 3 (0/4..20mA)	Input	
	0V	6		GND	
	AI4	7	Analog-Input 4 (0/4..20mA)	Input	
	0V	8		GND	
	AI5	9	Analog-Input 5 (0/4..20mA)	Input	
	0V	10		GND	
	AI6	11	Analog-Input 6 (0/4..20mA)	Input	
	0V	12		GND	
	AO1	13	A-Output 1	Output	
	0V	14		GND	
	AO2	15	A-Output 2	Output	
	0V	16		GND	
for voltage In-/Output: use 0V terminal as refer-ence ground for trans-mitters	(upper terminal row)				
	24V	17	Analog-Input 7 (0..40V)	+24V (Supply.)	
	AI7	18		Input	
	0V	19		GND	
	24V	20	Analog-Input 8 (0..40V)	+24V (Supply.)	
	AI8	21		Input	
	0V	22		GND	
for temp Inputs: connect sensors directly with Tmp an 0V without any other connections	Tmp1	23	Temp-Input 1	Sensor PT1000	
	0V	24		GND	
	Tmp2	25	Temp-Input 2	Sensor PT1000	
	0V	26		GND	
	Tmp3	27	Temp-Input 3	Sensor PT1000	
	0V	28		GND	
	Tmp4	29	Temp-Input 4	Sensor PT1000	
	0V	30		GND	

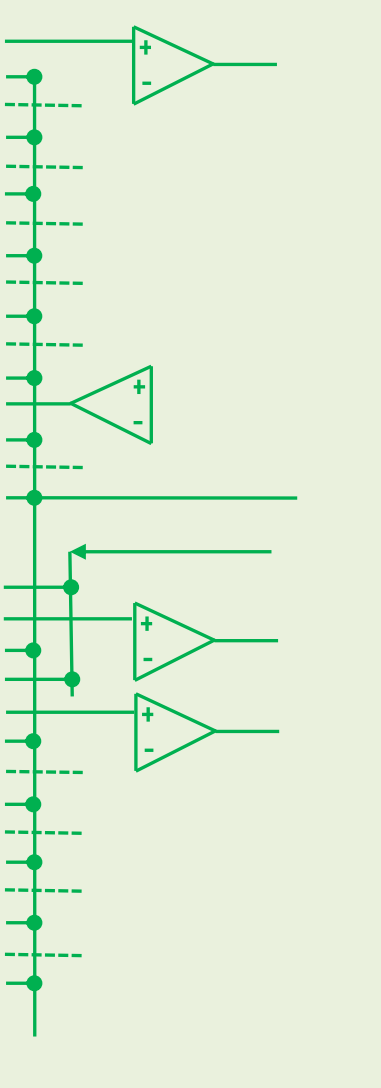

1.6.18.4 LED Indications

(the LEDs are mounted directly on the PCB and visible by the transparent rail box front)

Status-LED ..... module status
LED Ao1..2 ..... AO Status

1.6.18.5 Application Note

1.6.18.6 Technical Data

Inputs:
Number of analog inputs ..... 6 current
Connection technology 2-wire
Type ..... current
Input range ..... nom. 0...20mA (full ADC approx. 0...23.3mA, max. 30mA)
Input resistance ..... approx. 175Ohm
Resolution ..... 10 Bit, 0.1% (related on measure range)
Linearity..... 0.2% (related on measure range)
Accuracy ..... 0.5% (related on measure range)
Filter..... hardware, 1st order, $f_{cut\ off}$ = approx. 100Hz

Number of analog inputs ..... 2 voltage
Connection technology ..... 2/3-wire (supports sensor power supply)
Type ..... voltage
Input range ..... nom. 0...40V (full ADC approx. 0...42V, max. 50V)
Input resistance ..... approx. 500kOhm
Resolution ..... 10 Bit, 0.1% (related on measure range)
Linearity..... 0.2% (related on measure range)
Accuracy ..... 0.5% (related on measure range)
Filter..... hardware, 1st order, $f_{cut\ off}$ = approx. 100Hz

Number of temperature inputs.. 4
Connection technology ..... 2-wire (plus separate shield)
Type PT1000
Input range ..... nom. -50...350°C (full ADC approx. -75...380°C)
Input resistance ..... approx. 0.6mA
Resolution ..... 10 Bit, 0.1% (related on measure range)
Linearity..... 0.2% (related on measure range)
Accuracy ..... 0.5% (related on measure range)
Filter..... hardware, 1st order, $f_{cut\ off}$ = approx. 100Hz
Linearization ..... must be done in application software

Number of current outputs 2
Range, nominal ..... 0/4 to 20mA
Maximum current ..... approx. 21mA
Maximum voltage..... > 12V (load < 600 Ω) @24V internal supply
Filter..... hardware, 1st order, $f_{cut\ off}$ = approx. 0.7Hz

Others:
Bus power consumption..... sensor supply@24V, <15mA@3.3V

Mechanics:
Terminals ..... 16 + 14 cage clamp Wago series 250, 3.5mm
Connection..... usable with one litz wire from 0.5 – 1.5 mm²
Dimensions ..... 72 x 96 x 63 mm
Weight ..... approx. 150g

- **Process Data Image**

Out-Userdata **from** Master to Slave	**In**-Userdata **to** Master from Slave

total: 4 Bytes			total: 24 Bytes		
Byte	Function	rC Assign...	Byte	Function	rC Assign...
0, 1	Analog-Output 1 0...15000 Dig. ≡ 0...20.0 mA	... + eB_W0, 0, ...	0, 1	Analog-Input 1 0...894 Dig. ≡ 0...20 mA ... or 0...933 Dig. ≡ 0...10 V	... + eB_W0, 0, ...
2, 3	Analog-Output 2 0...15000 Dig. ≡ 0...20.0 mA	... + eB_W1, 0, ...	2, 3	Analog-Input 2 0...894 Dig. ≡ 0...20 mA ... or 0...933 Dig. ≡ 0...10 V	... + eB_W1, 0, ...
	not used		4, 5	Analog-Input 3 0...894 Dig. ≡ 0...20 mA ... or 0...933 Dig. ≡ 0...10 V	... + eB_W2, 0, ...
	not used		6,7	Analog-Input 4 0...894 Dig. ≡ 0...20 mA ... or 0...933 Dig. ≡ 0...10 V	... + eB_W3, 0, ...
	not used		8, 9	Analog-Input 5 0...894 Dig. ≡ 0...20 mA ... or 0...933 Dig. ≡ 0...10 V	... + eB_W4, 0, ...
	not used		10, 11	Analog-Input 6 0...894 Dig. ≡ 0...20 mA ... or 0...933 Dig. ≡ 0...10 V	... + eB_W5, 0, ...
	not used		12, 13	Analog-Input 7 0...949 Dig. ≡ 0...40 V	... + eB_W6, 0, ...
	not used		14, 15	Analog-Input 8 0...949 Dig. ≡ 0...40 V	... + eB_W7, 0, ...
	not used		16, 17	Analog Input Temp 1 77...872 Dig. ≡ 0...100 °C ≡ 100 und 138,5 Ohm	... + eB_W8, 0, ...
	not used		18, 19	Analog Input Temp 2 77...872 Dig. ≡ 0...100 °C ≡ 100 und 138,5 Ohm	... + eB_W9, 0, ...
	not used		20, 21	Analog Input Temp 3 77...872 Dig. ≡ 0...100 °C ≡ 100 und 138,5 Ohm	... + eB_W10, 0, ...
	not used		22, 23	Analog Input Temp 4 77...872 Dig. ≡ 0...100 °C ≡ 100 und 138,5 Ohm	... + eB_W11, 0, ...

Analog Output x

-	-	AOV13	AOV12	AOV11	AOV10	AOV9	AOV8
Bit 15							Bit 8

AOV7	AOV6	AOV5	AOV4	AOV3	AOV2	AOV1	AOV0
Bit 7							Bit 0

Bit 9-0 ..... AOV<13:0>: Analog Output Value (Little Endian)
11 1010 1001 1000 = 15000 (output 20mA)
...
00 0000 0000 0000 = 0 (output 0mA)

Analog Input x

-	-	-	-	-	-	AIV9	AIV8
Bit 15							Bit 8

AIV7	AIV6	AIV5	AIV4	AIV3	AIV2	AIV1	AIV0
Bit 7							Bit 0

Bit 9-0 ..... AIV<9:0>: Analog Input Value (Little Endian)
11 1111 1111 = Analog Input Value: 1023
…
00 0000 0000 = Analog Input Value: 0

1.6.19 C-Eng3Rel2Ai2Ri4Dio-01-RB

1x Reluctance Sensor
1x Relay-Output, NO, potential free
2x Magnet Switch, Control / Guard
2x Relay-Output, CO, potential free
2x Analog Input, 0/4..20mA, 2/3-wire
2x R-Network-Input, 4 states
6x Dig.-In-/Output, 24V, p-switch, 1-wire

Module ID	**2-485**		
Order No.	**CAE_C-Eng3Rel2Ai2Ri6Dio-01-RB**		
Terminals	**push-in** (≤ 1.5mm²)	Core	**M25C**
Size	**72 x 90 (96) mm**	BB_{FCP}	**2-1-1**
Variants	-		

1.6.19.1 Brief Description

This brick offers an input for one reluctance sensor and controls 2 magnet switches of a diesel engine (driving and state detecting). Moreover it offers 3 relay outputs, the detection of 2 resistor networks, 2 analog current inputs and 4 digital in/outputs. It is enclosed in a rail box.

1.6.19.2 Connections and Indication-/Operation Elements

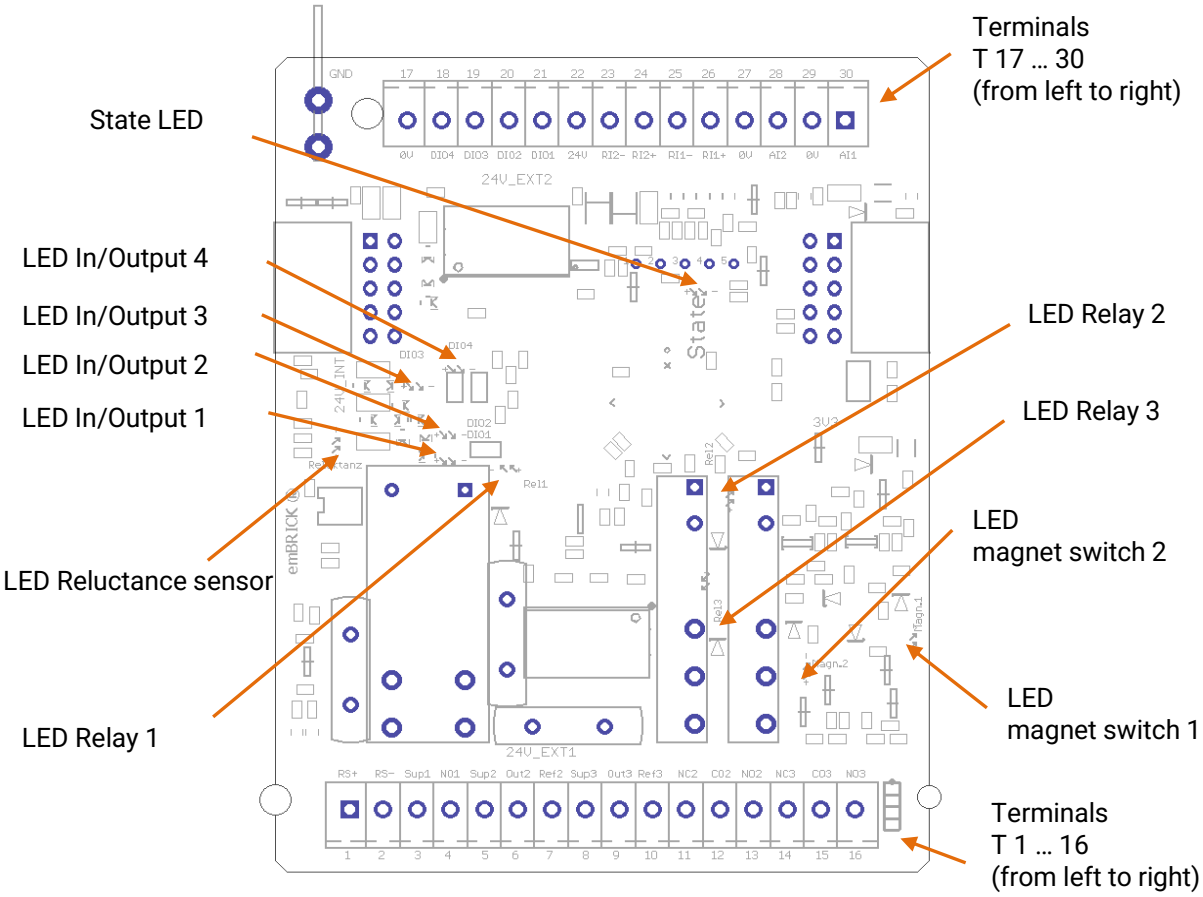

1.6.19.3 Terminal Assignment

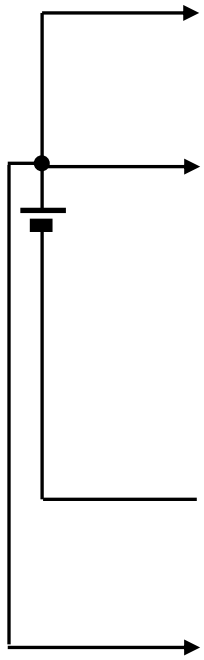

Circuit Example	Ident.	Ter.	Function	Usage	internal simplified diagram
	(lower terminal row)				
	RS1+	1	Reluctance	Line +	
	RS1-	2		Line -	
	CO1	3	Relay 1 (Eng-Stop)		
	NO1	4			
	Sup1	5	Magnet Switch 1	Test Supply 24V	
	MS1	6		High Side Pol	
	GND	7		0V	
	Sup2	8	Magnet Switch 2	Test Supply 24V	
	MS2	9		High Side Pol	
	GND	10		0V	
	NC2	11	Relay 2		
	CO2	12			
	NO2	13			
	NC3	14	Relay 3		
	CO3	15			
	NO3	16			
	(upper terminal row)				
	0V	17	GND	GND	
	DIO4	18	dig. In-/Output 1	I/O (comb.)	
	DIO3	19	dig. In-/Output 1	I/O (comb.)	
	DIO2	20	dig. In-/Output 1	I/O (comb.)	
	DIO1	21	dig. In-/Output 1	I/O (comb.)	
	24V	22	24V supply	+24V	
	RI2-	23	R-Nw-Input 2	Res. Input	
	RI2+	24		Res. Input	
	RI1-	25	R-Nw-Input 1	Res. Input	
	RI1+	26		Res. Input	
	0V	27	Analog-Input 2 (0/4..20mA)	GND	
	AI2	28		Input	
	0V	29	Analog-Input 1 (0/4..20mA)	GND	
	AI1	30		Input	

1.6.19.4 LED Indications

(the LEDs are mounted directly on the PCB and visible by the transparent rail box front)

LED reluctance sensor ..... reluctance sensor
LED Relay 1...3 ..... status indication of relay 1..3
LED In/Output 1...4 ..... status indication of digital input 1..4
LED Magnet switch 1...2 ..... status indication of magnet switch outputs1..2
Status LED ..... module status

1.6.19.5 Application Note

In addition to the notes in chapter **4**, please regard the following:

- The terminals 3, 5, 8 and 22 need external 24V dc and have a common GND terminal 17.
- The terminals 27+29 are connected with the internal ground. These are for the sensor ground.

1.6.19.6 Technical Data

Note: For further global specifications refer to chapter XXX

Input:

Number of analog inputs ..... 2 current
- Connection technology 2-wire
  - Type ..... current
  - Input range ..... nom. 0...20mA (full ADC approx. 0...23.3mA, max. 30mA)
  - Input resistance ..... approx. 175Ohm
- Resolution ..... 10 Bit, 0.1% (related on measure range)
- Linearity..... 0.2% (related on measure range)
- Accuracy ..... 0.5% (related on measure range)
- Filter..... hardware, 1st order, $f_{cut\ off}$ = approx. 100Hz

Number of R-Network inputs 2
- Connection technology ..... 1-wire, common ground
- Type ..... 1k (if closed), 10k (if open) resistor network
- logical states 4
  - short circuit (<10 Ohm) ..... > 6,5mA
  - closed (1k) ..... 2 .. 6mA
  - open (11k) ..... 0,5 .. 1,5mA
  - wire break (∞) ..... < 0,25mA

Number of reluctance inputs 1
- Connection technology 2-wire
  - Sensitivity ..... 10 mV
  - Input resistance ..... approx. 30 kOhm
  - Input frequency..... max. 10 kHz
- Filter..... hardware, 1st order, $f_{cut\ off}$ = approx. 15 kHz

Number of magnet switch in's .. 2
- Connection technology 2-wire
- Operation type ..... injection 5mA current and measure voltage
- Detection of ..... coil connection, coil short circuit, ext. activation

Output:

Number of Relays NO..... 1 (normal open, each with 2 terminals)
Number of Relays CO..... 2 (change over, each with 3 terminal)
- Type..... isolated
- Switching voltage ..... 24V ac/dc
- Switching current ..... max. 6A ac/dc, for details refer to the LYCA024V datasheet. The terminal blocks rated VDE 250V/3A, UL 300V/6A. The user have to install an appropriate fuse in the supply line of the relays.
- Permanent load ..... max. 4 Aac/dc
- Lifetime ..... refer to the LYCA024V relay datasheet

Number of magnetic switch 2
- Permanent load ..... max. 2A dc
- Connection technology ..... 1 wire, common ground, second wire only needed for guard function

Combining Input/Output:

Number of digital IOs 4
Connection technology ..... 1-wire, common ground
Type ..... p-switching
"0" signal voltage ..... -3 ... 5V
"1" signal voltage ..... 15 ... 30V
Input current (in operation)..... typ. 3mA to 8mA at “1” Signal
driving current (out operat.)..... typ. 50mA, short circuit protection

Mechanics:
Terminals ..... 16 + 14 cage clamp Wago series 250, 3.5mm
Connection..... usable with one litz wire from 0.5 – 1.5 mm²
Dimensions ..... 72 x 96 x 63 mm
Weight ..... approx. 150g

- ## Process Data Image

Out-Userdata **from** Master to Slave total: 6 Bytes			**In**-Userdata **to** Master from Slave total: 18 Bytes		
Byte	Function	rC Assign...	Byte	Function	rC Assign...
0, 1	Reluctance In Control usage see below	... + eB_W0, 0, ...	0, 1	Reluctance In Sum 1 usage see below	... + eB_W0, 0, ...
2, 3	Reluctance In Attribute usage see below	... + eB_W1, 0, ...	2, 3	Reluctance In Difference 1 usage see below	... + eB_W1, 0, ...
4, 5	Reluctance threshold 0…8000 Dig. ≡ 0...100%	... + eB_W2, 0, ...	4, 5	Reluctance signal 0…1024 Dig. ≡ 0...100%	... + eB_W2, 0, ...
6	Digital Output 1...4 (DO1...4)	... + eB_B6, 0, ... + eB_B6, 3, ...	6, 7	Magnetswitch 1 Testvolt. 0...933 Dig. ≡ 0...10 V	... + eB_W3, 0, ...
7	Relaisoutput 1...3 Magnet Switch 1...2 (Aktivierung/Anlassen)	... + eB_B7, 0, ... + eB_B7, 2, ... + eB_B7, 3, ... + eB_B7, 4, ...	8, 9	Magnetswitch 1 Testvolt 0...933 Dig. ≡ 0...10 V	... + eB_W4, 0, ...
	not used		10, 11	Analog-Input 1 0...894 Dig. ≡ 0...20 mA	... + eB_W5, 0, ...
	not used		12, 13	Analog- Input 2 0...894 Dig. ≡ 0...20 mA	... + eB_W6, 0, ...
	not used		14, 15	R-Network-Input 1 0...89…476...913 Dig. ≡ ∞…10k...1k…0R	... + eB_W7, 0, ...
	not used		16, 17	R-Network-Input 1 0...89…476...913 Dig. ≡ ∞…10k...1k…0R	... + eB_W8, 0, ...
	not used		18	Digital Input 1...4 (DI1...4) Short circuit (DI5...7)	... + eB_B18, 0, ... + eB_B18, 3, ... + eB_B18, 4, ... + eB_B18, 6, ...

Digital Output

-	-	-	-	DO4	DO3	DO2	DO1
Bit 7							Bit 0

Bit 3-0 ..... DO<4:1>: Set Digital Outputs
1 = Set corresponding Output to HIGH
0 = Set corresponding Output to LOW

Relay and Magnetswitch Control

-	-	-	MS2	MS1	REL3	REL2	REL1
Bit 7							Bit 0

Bit 2-0 ..... REL<3:1>: Set Relay
1 = activate corresponding Relay
0 = deactivate corrensponding Relay
Bit 4-3 ..... MS<2:1>: Set Magnetswitch
1 = Set corresponding Output to HIGH
0 = Set corresponding Output to LOW

Reluctance In Control

MODE5	MODE4	MODE3	MODE2	MODE1	MODE0	MSET9	MSET8
Bit 15							Bit 8

MSET7	MSET6	MSET5	MSET4	MSET3	MSET2	MSET1	MSET0

Bit 7	Bit 0

Bit 15-10 ..... MODE<4:0>: Pulse Input operating Mode
110010 = Mode Period Duration with Time Grid 50ms
110001 = Mode Period Duration with Time Grid 49ms
…
000010 = Mode Period Duration with Time Grid 2ms
000001 = Mode Period Duration with Time Grid 1ms
000000 = Mode Fixed Gate Time

Bit 9-0 ..... MSET<9:0>: Mode Settings
in Mode "Period Duration": Filter Period in ms, to filter out contact chattering (Little Endian):
11 1111 1111 = Filter Period 1023ms
…
00 0000 0000 = Filter Period 0ms
in Mode "Fixed Gate Time":
Mode Settings has no effect

Reluctance In Attribute

ATTR15	ATTR14	ATTR13	ATTR12	ATTR11	ATTR10	ATTR9	ATTR8
Bit 15							Bit 8

ATTR7	ATTR6	ATTR5	ATTR4	ATTR3	ATTR2	ATTR1	ATTR0
Bit 7							Bit 0

Bit 15-0: ..... ATTR<15:0>: Additional Pulse Input Attributes
in Mode "Period Duration": Timeout for 0-setting (Little Endian):
1111 1111 1111 1111 = 65535 * Time Grid
…
0000 0000 0000 0000 = 0
in Mode "Fixed Gate Time": Gate Time in ms (Little Endian):
1111 1111 1111 1111 = 65535ms
…
0000 0000 0000 0000 = 0ms

Reluctance In Sum

TR1	TR0	PISV13	PISV12	PISV11	PISV10	PISV9	PISV8
Bit 15							Bit 8

PISV7	PISV6	PISV5	PISV4	PISV3	PISV2	PISV1	PISV0
Bit 7							Bit 0

Bit 15-14 ..... TR<1:0>: Time Reference; 2 Bit Counter that counts up every millisecond. Can be used to compensate the clock deviation of the *emBRICK®*-module.

Bit 13-0 ..... Pulse Input Sum Value; Increments on falling edge; Resets to zero on overflow (Little Endian):
11 1111 1111 1111 = 16383
…
00 0000 0000 0000 = 0

Reluctance In Difference

PIDV15	PIDV14	PIDV13	PIDV12	PIDV11	PIDV10	PIDV9	PIDV8
Bit 15							Bit 8

PIDV7	PIDV6	PIDV5	PIDV4	PIDV3	PIDV2	PIDV1	PIDV0
Bit 7							Bit 0

Bit 15-0 ..... PIDV<15:0>: Pulse Input Difference Value
in Mode “Fixed Gate Time”:
Displays all fallen edges monitored in the timeframe defined in Pulse Input Attribute x

Reluctance threshold

AO15	AO14	AO13	AO12	AO11	AO10	AO9	AO8
Bit 15							Bit 8

AO7	AO6	AO5	AO4	AO3	AO2	AO1	AO0
Bit 7							Bit 0

Bit 15-0: ..... AO<15:0>: Analog Output (threshold setting)
0001 1111 0100 0000 = 100 %
…
..... 0000 0000 0000 0000 = 0 %

Reluctance signal

-	-	-	-	-	-	AI9	AI8
Bit 15							Bit 8

AI7	AI6	AI5	AI4	AI3	AI2	AI1	AI0
Bit 7							Bit 0

Bit 9-0: ..... AI<9:0>: Analoger Input (Little Endian)
11 1111 1111 = Analoge Input value: 1023
…
..... 00 0000 0000 = Analoge Input value: 0

Analog-/R-Network-/Magnetswitch X

-	-	-	-	-	-	AIV9	AIV8
Bit 15							Bit 8

AIV7	AIV6	AIV5	AIV4	AIV3	AIV2	AIV1	AIV0
Bit 7							Bit 0

Bit 9-0 ..... AIV<9:0>: Analog Input value (Little Endian)
11 1111 1111 = Analog Input value: 1023
…
00 0000 0000 = Analog Input value: 0

Digital Input

-	DI7	DI6	DI5	DI4	DI3	DI2	DI1
Bit 7							Bit 0

Bit 3-0 ..... DI<4:1>: Digital Inputs
1 = Corresponding Input is HIGH
0 = Corresponding Input is LOW
Bit 4 ..... DI5: short circuit detection of DOs
1 = all DOs are working correct
0 = one or more DO has a short circuit
Bit 5 ..... DI6: short circuit detection of Magnet switch 1
1 = NO short circuit
0 = short circuit at the Magnet switch 1
Bit 6 ..... DI7: short circuit detection of Magnet switch 2
1 = NO short circuit
0 = short circuit at the Magnet switch 2

1.6.20 G-2ComSens-#1

Carrier-Board for Sub-Brick
2x Subbrick-Connector

Module ID	**2-801, 2-811**		
Order No.	**CAE_G-2ComSens-#1**		
Terminals	**Subbricks**	Core	**M24EPA**
Size	**4 eU** (44mm x 72mm)	BB_{FCP}	**1-1-1**
Variants	**01: electrical connected** **11: electrical isolated**		

1.6.20.1 Brief Description

This is a multi-purpose module for many sensors and communication interfaces. The sensor and communication interfaces are on Subbricks. Up to two Subbricks can be connected to the Slave. As an interface for the Subbricks there's a connector on the main PCB (Subbrick Connector 1/2). Multiple serial interfaces, digital in-/outputs and analog inputs are available over this connector.

The module version 2-811 is electrically isolated, while version 2-801 is electrically connected.

1.6.20.2 Connectors and Indication-/ Operation-Elements

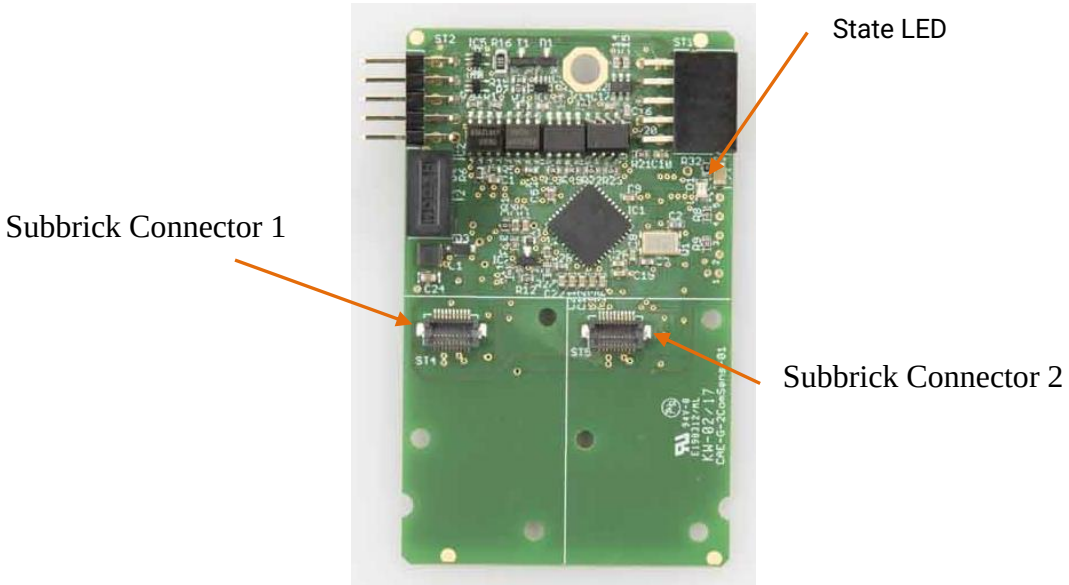

1.6.20.3 LED Indications

Status LED ..... module status (see **Fehler! Verweisquelle konnte nicht gefunden werden.**)

1.6.20.4 Technical Data

Note: For further global specification refer to chapter 4

Others:
Isolation Bus to I/O ..... by version 2-811
Status indication ..... LEDs for the module status

Mechanics:
Terminals ..... 2 x 12, cage clamp Wago250
Connection..... usable with one litz wire from 0.2 – 0.5 mm²
Dimensions ..... 44 x 72 x 20 mm
Weight ..... approx. 30g

1.6.20.5 Process Data Image

How to communicate with the ComSens:

Pages:
The communication with the ComSens takes place over pages, which each consist of 30 bytes data to the SubBrick and 30 bytes from the SubBrick.
To communicate with a SubBrick there are most likely several pages to go through.
As an example, one page is responsible for initializing the SubBrick and another one then to read data from the SubBrick.
The page select byte is at every page located on byte 0 (Data to SubBrick).

Trigger Counter to SubBrick:
The ” Trigger Counter to SubBrick (TrigCnt)“ is closely related to the pages.
It is located on byte 1 at every page (Data to SubBrick).
After specifying a page (Setting all parameters/bytes) this TrigCnt must be incremented.
With incrementing this counter, the SubBrick has noticed that a new page was send to him.

1.6.20.6 Software Operation Modes

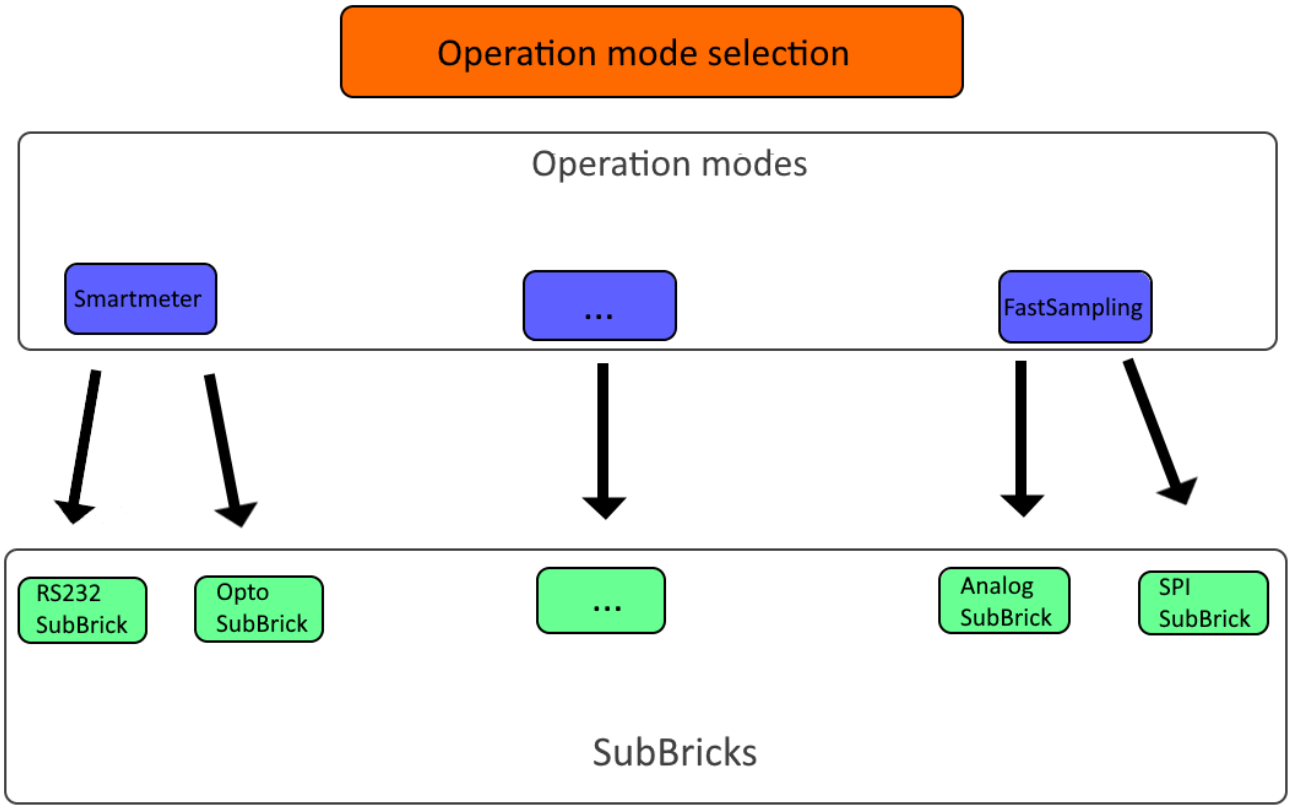

Explanation of the operation modes:
Software modules can be driven on different SubBricks, as an example, the Smart meter operation mode can run on the RS232-Subbrick but also on the D0-Opto-SubBrick.
Therefore, the user can choose the software module with that he wants to drive the SubBrick.
This Software module can be chosen on Page 0x00 of the communication protocol.
Page 0x01 - 0xFF are then specified depending on the selected mode.

Self-configuring SubBricks:
This are SubBricks, which automatically choose their operation mode. So, the communication on the selection page (page 0) can be skipped.
Following SubBricks are Self-Configuring:

- CAM-SB-1Wire-0#
- CAM-2SB-ImpTmp-0#
- CAM-2SB-PotTempTmp-0#

SubBricks (Subricks that are using the operation mode selection):

- CAM-SB-RS485-0#
- CAM-SB-RS232-0#
- CAM-SB-D0-Opto-0#
- CAM-SB-5RS232Multi-0# (Planned)
- CAM-2SB-AI-0# (Planned)

- CAM-SB-SPI-0# (Planned)
- CAM-SB-I2C-0# (Planned)

Mutual compatibility of SubBricks:

Subbricks	CAM-SB-1Wire	CAM-SB-RS485	CAM-SB-RS232	CAM-SB-D0-Opto	CAM-SB-I2C(Planned)	CAM-SB-SPI(Planned)
CAM-SB-1Wire	x	x	x	x	x	x
CAM-SB-RS485	x	x	x	x	x	x
CAM-SB-RS232	x	x	x	x	x	x
CAM-SB-D0-Opto	x	x	x	x	x	x
CAM-SB-I2C(Planned)	x	x	x	x	x	x
CAM-SB-SPI(Planned)	x	x	x	x	x	x

Green = Compatible
Red = Not Compatible

Note: All CAM-2SB-XXX SubBrick are not listed here, because they are using both SubBrick ports.

1.6.20.6.1 Selection Page

On the first page (Page 0) the software module has to be selected.

Out-Userdata **from** Master to Slave total: 30 Bytes			**In**-Userdata **to** Master from Slave total: 30 Bytes		
Byte	Function	rC Assign...	Byte	Function	rC Assign...
Page 0					
0	**Page Select** *PageSelect*		0	Reserved	
1	**Bit 0 - 6:** **Trigger Counter to SubBrick** *TrigCntToSub* **Bit 7:** Subbrick Sel		1	Reserved	
2	**Operation mode**		2	**Subbrick ID 1**	
3	Reserved		3	**Subbrick ID 2**	
4-29	Reserved		4-29	Reserved	

Page Select

Page 7	Page 6	Page 5	Page 4	Page 3	Page 2	Page 1	Page 0
Bit 7							Bit 0

Bit 7-0..... Page<7:0>: Page
0x00 = use Page 0
0x01 = use Page 1

…
0xFF= use Page 255

Trigger Counter to SubBrick

Port	Count 6	Count 5	Count 4	Count 3	Count 2	Count 1	Count 0
Bit 7	Bit 6						Bit 0

Bit 7 ..... Port<7>: Select SubBrick for Communication
0 = PORT A (Left SubBrick connector)
1 = PORT B (Right SubBrick connector)
Bit 6-0..... Count<6:0>: Synchronisation Counter.
000 0000 = 0
…
111 1111 = 127

Operation mode

Mode 7	Mode 6	Mode 5	Mode 4	Mode 3	Mode 2	Mode 1	Mode 0
Bit 7							Bit 0

Bit 7-0..... Mode<7:0>: Operation mode
0x01 = Native mode (RS232, RS485)
0x02 = Modbus (RS485)
0x03 = neoCortec -> coming soon
0x04 = Smart Meter
0x05 = Smart Meter 8x
0x09 = FastSampling

Subbrick ID (same for Subrick ID1 & Subbrick ID2)

ID 7	ID 6	ID 5	ID 4	ID 3	ID 2	ID 1	ID 0
Bit 7							Bit 0

Bit 7-0..... ID<7:0>: Subbrick ID
0xXX = ID of Subrick

1.6.20.6.2 Native Serial-RxD-TxD Mode

This SubBrick is able to send and receive serial-native data over two wires (UART).
It offers various configurations like baud rate, data format (8N1, 7N1, 8E1, 7E1) and trigger settings (Trigger after number of bytes or after a specific timeout).

<u>SubBrick Support:</u>

- CAM-SB-RS485-0#
- CAM-SB-RS232-0#
- CAM-SB-D0-Opto-0#

Out-Userdata **from** Master to Slave total: 30 Bytes			**In**-Userdata **to** Master from Slave total: 30 Bytes		
Byte	Function	rC Assign...	Byte	Function	rC Assign...
Page 1					
0	**Page**		0	**Status SubBrick**	
1	**Bit 0 - 6:** **Trigger Counter to SubBrick** *TrigCntToSub* **Bit 7:** Subbrick Sel		1	**Bit 0 - 6:** Receive Counter **Bit 7:** Subbrick Port	
2	**Acknowledge Counter**		2	**Page Update Counter**	
3	Reserved		3	Reserved	
4-5	**Baudrate multiplier**		4-5	Reserved	
6	**Data format**		6	Reserved	
7	Reserved		7	Reserved	
8	**Trigger**		8	Reserved	
9	Reserved			Reserved	
10	**Interface**			Reserved	
8-29	Reserved		8-29	Reserved	

Page
See Page 0

Trigger Counter to SubBrick
See Page 0

Acknowledge Counter

ACK 7	ACK 6	ACK 5	ACK 4	ACK 3	ACK 2	ACK 1	ACK 0
Bit 7							Bit 0

Bit 7-0..... ACK<7:0>: Acknowledge Counter
0x00-0xFF = Counter to acknowledge a data page (Count this up, if the received data on the page has been cached)

Baudrate multiplier

BM 15	BM 14	BM 13	BM 12	BM 11	BM 10	BM 9	BM 8
BM 7	BM 6	BM 5	BM 4	BM 3	BM 2	BM 1	BM 0
Bit 15							Bit 0

Bit 15-0..... BM<15:0>: Baudrate multiplier
0x01-0x6829 = Baudrate configuration (300bd * Baudrate multiplier)

Data format

DF 7	DF 6	DF 5	DF 4	DF 3	DF 2	DF 1	DF 0
Bit 7							Bit 0

Bit 7-0..... DF<7:0>: Data format
0x00 = 8N1
0x01 = 8E1
0x08 = 7N1
0x09 = 7E1

Trigger

TRIG	TRIG 6	TRIG 5	TRIG 4	TRIG 3	TRIG 2	TRIG 1	TRIG 0
Bit 7							Bit 0

Bit 7-0..... TRIG<7:0>: Trigger
0x00 = Trigger after n seconds timeout
0x01 = Trigger after n bytes received

Interface

INF	INF 6	INF 5	INF 4	INF 3	INF 2	INF 1	INF 0
Bit 7							Bit 0

Bit 7-0..... INF <7:0>: Interface
0x00 = RS232 (choose for CAM-SB-D0-Opto-0#)
0x01 = RS485

Status SubBrick

Status 4	Status 3	Status 2	Status 1	Status 0	Flag 2	Flag 1	Flag 0
Bit 7				Bit 3	Bit 2	Bit 1	Bit 0

Bit 7-3..... Status<7:3>: Status SubBrick
0x01 = Status_Setup_Error
0x02 = Status_Setuped
Bit 2-0..... Flag<2:0>: Flag
Bit 0 = Parity Error
Bit 1 = Framing Error
Bit 2 = Buffer overlow (intern buffer (Receive Buffer))

Receive Counter

RCount 7	RCount 6	RCount 5	RCount 4	RCount 3	RCount 2	RCount 1	RCount 0
Bit 7							Bit 0

Bit 7-0..... RCount<7:0>: Receive Counter
0x00-0xFF = Counts, if the trigger is reached

Page Update Counter

PCount 7	PCount 6	PCount 5	PCount 4	PCount 3	PCount 2	PCount 1	PCount 0
Bit 7							Bit 0

Bit 7-0..... PCount<7:0>: Page Update Counter
0x00-0xFF = Counts, if the data is consistent on the page and ready to read (Counts if trigger is reached, on page change and on subbrick-port change)

Out-Userdata **from** Master to Slave total: 30 Bytes			**In**-Userdata **to** Master from Slave total: 30 Bytes		
Byte	Function	rC Assign...	Byte	Function	rC Assign...
Page 2...n					
0	**Page**		0	**Status SubBrick**	
1	**Bit 0 - 6:** **Trigger Counter to SubBrick** *TrigCntToSub* **Bit 7:** Subbrick Sel		1	**Bit 0 - 6:** Receive Counter **Bit 7:** Subbrick Port	
2	**Acknowledge Counter**		2	**Page Update Counter**	
3	Reserved		3	Reserved	
4-5	**Trigger specification**		4-5	Reserved	
6-7	**Amount of data to send to Transfer-Buffer**		6-7	**Amount of received data**	
8-9	Reserved		8-9	Reserved	
10-29	Data		10-29	Data	

Page
See Page 0

Trigger Counter to SubBrick
See Page 0

Acknowledge Counter
See Page 1

Trigger specification

TS 15	TS 14	TS 13	TS 12	TS 11	TS 10	TS 9	TS 8
TS 7	TS 6	TS 5	TS 4	TS 3	TS 2	TS 1	TS 0
Bit 15							Bit 0

Bit 15-0..... TS<15:0>: Trigger specification
0xXXXX = If Trigger = 0 -> Amount of bytes to trigger (0x00-Max Receive Buffer Size)
If Trigger = 1 ->Amount of time to trigger for timeout (1ms * Trigger specification, 0x00-0xFFFF)

Amount of data to send to TransferBuffer

AMO 15	AMO 14	AMO 13	AMO 12	AMO 11	AMO 10	AMO 9	AMO 8
AMO 7	AMO 6	AMO 5	AMO 4	AMO 3	AMO 2	AMO 1	AMO 0
Bit 15							Bit 0

Bit 15-0 ..... AMO <15:0>: Amount of data to send to TransferBuffer

0xXXXX = Set this before you want to transfer the last data page

Status SubBrick
See Page 1

Receive Counter
See Page 0

Page Update Counter
See Page 1

Amount of received data

REC 15	REC 14	REC 13	REC 12	REC 11	REC 10	REC 9	REC 8
REC 7	REC 6	REC 5	REC 4	REC 3	REC 2	REC 1	REC 0
Bit 15							Bit 0

Bit 15-0..... REC <15:0>: Amount of received data
0x0000-0xFFFF = Amount of Data received

Buffers/Maximums:

Size of the internal ReceiveBuffer: 2.5kB
Size of the internal ReceiveCache: 2.5kB
Size of the internal TransferBuffer 2.5kB

Status/Flags:

Flags:

- Parity Error:
  - Gets cleared when the user acknowledges the first page
- Framing Error:
  - Gets cleared when the user acknowledges the first page
- Receive buffer overflow:
  - Buffer and cache are overlowed.

Status:
Status_Setuped: Module successfully initialized, ready for communication

Status_Setup_Error: Error during setup, control your settings

Programming Note:

Condition:
You want to send 30 bytes and receive 20 bytes.

Implementation:
Select the *operation mode(P0)* on page 0 (in this case -> "native mode")
The *command counter(P0)* must be increased.

Out Userdata

Page	0
Counter_In	1
Output_2	1
Output_3	0
Output_4	0
Output_5	0
Output_6	0
Output_7	0
Output_8	0
Output_9	0
Output_10	0
Output_11	0
Output_12	0
Output_13	0
Output_14	0
Output_15	0
Output_16	0
Output_17	0
Output_18	0
Output_19	0
Output_20	0
Output_21	0
Output_22	0
Output_23	0
Output_24	0
Output_25	0
Output_26	0
Output_27	0
Output_28	0
Output_29	0

Page
Command counter
Operation mode

In Userdata

Status	24
Counter_Out	0
Input_2	4
Input_3	0
Input_4	0
Input_5	0
Input_6	0
Input_7	0
Input_8	0
Input_9	0
Input_10	0
Input_11	0
Input_12	0
Input_13	0
Input_14	0
Input_15	0
Input_16	0
Input_17	0
Input_18	0
Input_19	0
Input_20	0
Input_21	0
Input_22	0
Input_23	0
Input_24	0
Input_25	0
Input_26	0
Input_27	0
Input_28	0
Input_29	0

Status Brick
-> Now "Status_Mode_Changed"
SubBrick ID

Send:

(Page 1)
Set the *baud rate multiplier*(P1), interface and the *data format(P1)* (8N1, 7E1 etc.) and select whether you want a result after n bytes or after a certain timeout -> *trigger type(P1)*.
(In the case -> bytes, because you want to receive 20 bytes)
The *command counter(P1)* must be increased.

Out Userdata

Page	1	Page
Counter_In	2	Command counter
Output_2	0	
Output_3	0	
Output_4	0	Baudrate multiplier -> 300bd
Output_5	1	
Output_6	0	Data format -> 8N1
Output_7	0	
Output_8	0	Trigger -> trigger after n bytes
Output_9	0	
Output_10	1	Interface -> RS485
Output_11	0	
Output_12	0	
Output_13	0	
Output_14	0	
Output_15	0	
Output_16	0	
Output_17	0	
Output_18	0	
Output_19	0	
Output_20	0	
Output_21	0	
Output_22	0	
Output_23	0	
Output_24	0	
Output_25	0	
Output_26	0	
Output_27	0	
Output_28	0	
Output_29	0	

In Userdata

Status	16	Status Brick -> Now "Status_Setuped"
Counter_Out	0	
Input_2	0	
Input_3	0	
Input_4	0	
Input_5	0	
Input_6	0	
Input_7	0	
Input_8	0	
Input_9	0	
Input_10	0	
Input_11	0	
Input_12	0	
Input_13	0	
Input_14	0	
Input_15	0	
Input_16	0	
Input_17	0	
Input_18	0	
Input_19	0	
Input_20	0	
Input_21	0	
Input_22	0	
Input_23	0	
Input_24	0	
Input_25	0	
Input_26	0	
Input_27	0	
Input_28	0	
Input_29	0	

On page 2 it is now specified how many bytes you want to receive (or how long the timeout should be),
in this case you specify 20 bytes.

➔ *Trigger specification(P2)*

The data have to be written to pages 2-n (20 bytes per page).
In this case, page 2 has to be written with the first 20 bytes.
The *Amount of data to send to TransferBuffer(P2)* must still be 0 here, as there is still a page of data to be sent.
The *command counter(P2)* must get increased.

Out Userdata

Page	2	Page
Counter_In	3	Command counter
Output_2	0	
Output_3	0	
Output_4	0	Trigger specification -> 20 bytes
Output_5	20	
Output_6	0	
Output_7	0	
Output_8	0	
Output_9	0	
Output_10	0	Data to send (First 20 bytes)
Output_11	1	
Output_12	2	
Output_13	3	
Output_14	4	
Output_15	5	
Output_16	6	
Output_17	7	
Output_18	8	
Output_19	9	
Output_20	10	
Output_21	11	
Output_22	12	
Output_23	13	
Output_24	14	
Output_25	15	
Output_26	16	
Output_27	17	
Output_28	18	
Output_29	19	

In Userdata

Status	16	Status Brick
Counter_Out	0	
Input_2	0	
Input_3	0	
Input_4	0	
Input_5	0	
Input_6	0	
Input_7	0	
Input_8	0	
Input_9	0	
Input_10	0	
Input_11	0	
Input_12	0	
Input_13	0	
Input_14	0	
Input_15	0	
Input_16	0	
Input_17	0	
Input_18	0	
Input_19	0	
Input_20	0	
Input_21	0	
Input_22	0	
Input_23	0	
Input_24	0	
Input_25	0	
Input_26	0	
Input_27	0	
Input_28	0	
Input_29	0	

Page 3 is written with the remaining 10 bytes (a total of 30 bytes), the The *Amount of data to send to TransferBuffer(P3)* must also be specified (30 bytes), because in this case it is the last page on which the data are.
Increase the *command counter(P3)*.
The data is sent.

Out Userdata

Page	3	Page
Counter_In	4	Command counter
Output_2	0	
Output_3	0	
Output_4	0	Trigger specification -> 20 bytes
Output_5	20	
Output_6	0	Amount of data to send to Transfer-Buffer -> 30 bytes
Output_7	30	
Output_8	0	
Output_9	0	
Output_10	20	Data to send (last 10 bytes)
Output_11	21	
Output_12	22	
Output_13	23	
Output_14	24	
Output_15	25	
Output_16	26	
Output_17	27	
Output_18	28	
Output_19	29	
Output_20	0	
Output_21	0	
Output_22	0	
Output_23	0	
Output_24	0	
Output_25	0	
Output_26	0	
Output_27	0	
Output_28	0	
Output_29	0	

In Userdata

Status	16	Status Brick
Counter_Out	0	
Input_2	0	
Input_3	0	
Input_4	0	
Input_5	0	
Input_6	0	
Input_7	0	
Input_8	0	
Input_9	0	
Input_10	0	
Input_11	0	
Input_12	0	
Input_13	0	
Input_14	0	
Input_15	0	
Input_16	0	
Input_17	0	
Input_18	0	
Input_19	0	
Input_20	0	
Input_21	0	
Input_22	0	
Input_23	0	
Input_24	0	
Input_25	0	
Input_26	0	
Input_27	0	
Input_28	0	
Input_29	0	

<u>Receive:</u>

If the number of bytes has now been received (20 bytes), the *receive counter(P2-N)* increases and the received data can be read.

In order to transfer the data to the pages, the *acknowledge counter(P2-N)* must be adapted to the *page update counter(P2-N)*.

The received data can now be read out on pages 2-n.
A page is only valid when the *page update counter(P2-N)* has increased.
If further data is received during the readout, this data is buffered until the next trigger event.
Should further data be received, these are discarded, and this is indicated by a status flag.

Page 2 before adapted acknowledge counter:

Out Userdata

Page	2	Page
Counter_In	4	Command counter
Output_2	0	Acknowledge Counter
Output_3	0	
Output_4	0	
Output_5	20	
Output_6	0	
Output_7	30	
Output_8	0	
Output_9	0	
Output_10	0	
Output_11	1	
Output_12	2	
Output_13	3	
Output_14	4	
Output_15	5	
Output_16	6	
Output_17	7	
Output_18	8	
Output_19	9	
Output_20	10	
Output_21	11	
Output_22	12	
Output_23	13	
Output_24	14	
Output_25	15	
Output_26	16	
Output_27	17	
Output_28	18	
Output_29	19	

In Userdata

Status	16	Status Brick
Counter_Out	1	Receive Counter
Input_2	2	Page Update Counter
Input_3	0	
Input_4	0	
Input_5	0	
Input_6	0	
Input_7	20	Amount of received data
Input_8	0	
Input_9	0	
Input_10	101	Received data
Input_11	51	
Input_12	52	
Input_13	101	
Input_14	51	
Input_15	52	
Input_16	101	
Input_17	51	
Input_18	52	
Input_19	101	
Input_20	51	
Input_21	52	
Input_22	101	
Input_23	51	
Input_24	52	
Input_25	101	
Input_26	51	
Input_27	52	
Input_28	33	
Input_29	33	

Page 2 after adapted acknowledge counter:

Out Userdata

Page	2	Page
Counter_In	4	Command counter
Output_2	2	Acknowledge Counter
Output_3	0	
Output_4	0	
Output_5	20	
Output_6	0	
Output_7	30	
Output_8	0	
Output_9	0	
Output_10	0	
Output_11	1	
Output_12	2	
Output_13	3	
Output_14	4	
Output_15	5	
Output_16	6	
Output_17	7	
Output_18	8	
Output_19	9	
Output_20	10	
Output_21	11	
Output_22	12	
Output_23	13	
Output_24	14	
Output_25	15	
Output_26	16	
Output_27	17	
Output_28	18	
Output_29	19	

In Userdata

Status	16	Status Brick
Counter_Out	1	Receive Counter
Input_2	2	Page Update Counter
Input_3	0	
Input_4	0	
Input_5	0	
Input_6	0	
Input_7	0	Amount of received data
Input_8	0	
Input_9	0	
Input_10	0	Received data
Input_11	0	
Input_12	0	
Input_13	0	
Input_14	0	
Input_15	0	
Input_16	0	
Input_17	0	
Input_18	0	
Input_19	0	
Input_20	0	
Input_21	0	
Input_22	0	
Input_23	0	
Input_24	0	
Input_25	0	
Input_26	0	
Input_27	0	
Input_28	0	
Input_29	0	

1.6.20.6.3 Modbus RTU-Master

SubBrick Support:

- CAM-SB-RS485-0#
- CAM-SB-RS232-0#
- CAM-SB-D0-Opto-0#

For the communication to the Modbus-Salves the ComSens offers a cyclic way to read data from several Modbus-Slaves and an event triggered way to write data to the several Modbus-Slaves. First it is needed to set up the communication, that means to choose an operation setup (contains of mode and baud rate). To read different data (register, coils) from different Modbus-Slaves by periodic cycle you can do so by using one of three separate update cycle timer. If the cycle update is used select the Modbus slave addresses, Modbus function code and Modbus register offsets in process data image page 0x02…0x09 and choose one of the tree update timers. So, you can update a total of 32 Modbus data items automatically. Or you leave the timer selection at 0 and the read will only be executed once. Any read operation will only read 16 Bit of data.
If one of the slave addresses is 0 the following Items won't be Read.
Further it is possible to write an item to a Modbus slave, to do so use process data image page 0x10. Now you can set your Modbus salve address, Modbus function code and Modbus register offset and the data itself to send. To finally send the data increase the item counter by 1. To see the actual Item counter value, it can be read back from the item counter read back.

Out-Userdata **from** Master to Slave total: 6 Bytes			**In**-Userdata **to** Master from Slave total: 2 Bytes		
Byte	Function	rC Assign...	Byte	Function	rC Assign...
Page 1 Settings					
0	Page (= 01h)	... + eB_B0, 0, ...	0	Status read/write	... + eB_B0, 0, ...

1	Counter Out/ SB Select Bit 0...6 com Counter Bit 7 SubBrick select	... + eB_B1, 0, ...	1	Counter In / SB Select Bit0...6 com counter Bit7 selected SubBrick	... + eB_B1, 0, ...
2	Operation Setup	... + eB_B2, 0, ...			
3	Update cycle Time 1	... + eB_B3, 0, ...			
4	Update cycle Time 2	... + eB_B4, 0, ...			
5	Update cycle Time 3	... + eB_B5, 0, ...			

Page

Page 7	Page 6	Page 5	Page 4	Page 3	Page 2	Page 1	Page 0
Bit 7							Bit 0

Bit 7-0..... Page<7:0>: Page
0000 0000 = use Page 0(0x00) reserved by ComSens
0000 0001 = use Page 1(0x01)
...
1111 1111 = use Page 254(0xFF)

Counter Out/ SB Select

SB0	Count 6	Count 5	Count 4	Count 3	Count 2	Count 1	Count 0
Bit 7							Bit 0

Bit 7..... SB<0>: Select SubBrick for Communication
0 = Left SB
1 = Right SB
Bit 6-0..... Count<6:0>: Synchronization Counter.
000 0000 = 0
...
111 1111 = 127

Operation Setup

Mode 3	Mode 2	Mode 1	Mode 0	Baud 3	Baud 2	Baud 1	Baud 0
Bit 7							Bit 0

Bit 7-4..... Mode<3:0> Operation Mode
0000 =0 = Transparent (planed)
0001 = 1 = Modbus Master Lite
0010 = 2 = Modbus Master Extended (planed)
0011 = 3 = Modbus Slave (planed)
0100 = 4 = 3964R (planed)
Bit 3-0..... Baud<3:0>: Baud rate
0000 = 0 = 1200
0001 = 1 = 2400
0010 = 2 = 4800
0011 = 3 = 9600
0100 = 4 = 19200
0101 = 5 = 38400

Update cycle Time X

Time 7	Time 6	Time 5	Time 4	Time 3	Time 2	Time 1	Time 0
Bit 7							Bit 0

Bit 7-0..... Time<7:0>: Update cycle time variable update Time for the read mode
1111 1111 = 255 * 10ms
…
0000.0001 = 1 * 10ms

Status

State 7	State 6	State 5	State 4	State 3	State 2	State 1	State 0
Bit 7							Bit 0

Bit 7-0..... State<7:0>: Status
0000 0000 = 0 Nothing send yet
0000 0001 = 1 NOERROR
0000 0010 = 2 At least 1 Salve is on Failure
0000 0011 = 3 Timing Error

Counter In/ SB Select

SB 0	Count 6	Count 5	Count 4	Count 3	Count 2	Count 1	Count 0
Bit 7							Bit 0

Bit 7 ..... SB<0>: Select SubBrick for Communication
0 = Left SB
1 = Right SB
Bit 6-0..... Count<6:0>: Synchronisation Counter.
000 0000 = 0
…
111 1111 = 127

Out-Userdata **from** Master to Slave total: 18 Bytes			**In**-Userdata **to** Master from Slave total: 18 Bytes		
Byte	Function	rC Assign...	Byte	Function	rC Assign...
Page 2...9 Read					
0	Page (= 02h)	... + eB_B0, 0, ...	0	Status Read/Write	... + eB_B0, 0, ...
1	Counter Out/ SB Select Bit 0...6 Counter Bit 7 SB Select	... + eB_B1, 0, ...	1	Counter In / SB Select Bit0...6 com counter Bit7 SubBrick select	... + eB_B1, 0, ...
2	Modbus Read Item 1 Slave address	... + eB_B2, 0, ...	2	reserved	
3	Modbus Read Item 1 Function Code /Update	... + eB_B3, 0, ...	3	Modbus Read Item 1 Com-Status	... + eB_B3, 0, ...
4, 5	Modbus Read Item 1 Register starting address	... + eB_W2, 0, ...	4, 5	Modbus Read Item 1 Actual value	... + eB_W2, 0, ...
6	Modbus Read Item 2 Slave address	... + eB_B6, 0, ...	6	reserved	
7	Modbus Read Item 2 Function Code /Update	... + eB_B7, 0, ...	7	Modbus Read Item 2 Com-Status	... + eB_B7, 0, ...
8, 9	Modbus Read Item 2 Register starting address	... + eB_W4, 0, ...	8, 9	Modbus Read Item 2 actual value	... + eB_W4, 0, ...
10	Modbus Read Item 3 Slave address	... + eB_B10, 0, ...	10	Reserved	
11	Modbus Read Item 3 Function Code /Update	... + eB_B11, 0, ...	11	Modbus Read Item 3 Com-Status	... + eB_B11, 0, ...
12, 13	Modbus Read Item 3 Register starting address	... + eB_W6, 0, ...	12, 13	Modbus Read Item 3 actual value	... + eB_W6, 0, ...

14	Modbus Read Item 4 Slave address	... + eB_B14, 0, ...	14	Reserved	
15	Modbus Read Item 4 Function Code /Update	... + eB_B15, 0, ...	15	Modbus Read Item 4 Com-Status	... + eB_B15, 0, ...
16, 17	Modbus Read Item 4 Register starting address	... + eB_W8, 0, ...	16, 17	Modbus Read Item 4 actual value	... + eB_W8, 0, ...

Slave address

Addr 7	Addr 6	Addr 5	Addr 4	Addr 3	Addr 2	Addr 1	Addr 0
Bit 7							Bit 0

Bit 7-0 Addr<7:0>: Address of the Modbus Slave
0000 0000 = 0 Not a valid Address the update cycle will stop

...
1111 1111 = 255

Function Code /Update

Cmd 3	Cmd 2	Cmd 1	Cmd 0	Up 3	Up 2	Up 1	Up 0
Bit 7							Bit 0

Bit 7-4..... Cmd <3:0>: Function Code to the Slave
0001 = 0x01 =Read Coil
0011 = 0x03 = Read Holding Register
0100 = 0x04 = Read Input Register

Bit 3-0..... Up <3:0>: Update cycle selection
0000 = only read once
0001 = Update cycle 1
0010 = Update cycle 2
0011 = Update cycle 3

Register starting address

Data 15	Data 14	Data 13	Data 12	Data 11	Data 10	Data 9	Data 8
Bit 15							Bit 8

Data 7	Data 6	Data 5	Data 4	Data 3	Data 2	Data 1	Data 0
Bit 7							Bit 0

Bit 15-0..... Data<15:0>: Data Register starting address from Modbus Slave
0x0000
...
0xFFFF

Com- Status

Stat 7	Stat 6	Stat 5	Stat 4	Stat 3	Stat 2	Stat 1	Stat 0
Bit 7			...				Bit 0

Bit 7-0..... Stat <7:0>: Status of this Modbus Item
0000 0000 = 0 Nothing send yet
0000 0001 = 1 ILLEGAL FUNCTION
0000 0010 = 2 ILLEGAL DATA ADDRESS
0000 0011 = 3 ILLEGAL DATA VALUE

0000 0100 = 4 SLAVE DEVICE FAILURE
0000 0101 = 5 OK

Actual value

Data 15	Data 14	Data 13	Data 12	Data 11	Data 10	Data 9	Data 8
Bit 15							Bit 8

Data 7	Data 6	Data 5	Data 4	Data 3	Data 2	Data 1	Data 0
Bit 7							Bit 0

Bit 15-0 ..... Data<15:0>: Data from Modbus Slave
0x0000
...
0xFFFF

Out-Userdata **from** Master to Slave total: 9 Bytes			**In**-Userdata **to** Master from Slave total: 4 Bytes		
Byte	Function	rC Assign...	Byte	Function	rC Assign...
Page 0x10 Write					
0	Page (= 10h)	... + eB_B0, 0, ...	0	Status Read/Write	... + eB_B0, 0, ...
1	Counter Out/ SB Select Bit 0...6 Counter Bit 7 SB Select	... + eB_B1, 0, ...	1	Counter In / SB Select Bit0...6 com counter Bit7 SubBrick select	... + eB_B1, 0, ...
2	Modbus Write Item Slave Address	... + eB_B2, 0, ...	2	Status	... + eB_B2, 0, ...
3	Item Function Code	... + eB_B3, 0, ...			
4, 5	Item Register Address	... + eB_W2, 0, ...			
6, 7	Item Data	... + eB_W3, 0, ...			

Slave Address

Addr 7	Addr 6	Addr 5	Addr 4	Addr 3	Addr 2	Addr 1	Addr 0
Bit 7							Bit 0

Bit 7-0 ..... Addr<7:0>: Address of the Modbus Slave
0000 0000 = 0
...
1111 1111 = 255

Item Function Code

				Cmd 3	Cmd 2	Cmd 1	Cmd 0
Bit 7							Bit 0

Bit3-0 ..... Cmd<3:0> Function Code to the Slave
0001 = 0x01 = Write Single Coil
0110 = 0x06 = Write Single Register

Item Register Address

Data 15	Data 14	Data 13	Data 12	Data 11	Data 10	Data 9	Data 8
Bit 15							Bit 8

Data 7	Data 6	Data 5	Data 4	Data 3	Data 2	Data 1	Data 0
Bit 7							Bit 0

Bit 15-0..... Data<15:0>: Register Address of the Modbus Slave
0x0000
…
0xFFFF

Item Data

Data 15	Data 14	Data 13	Data 12	Data 11	Data 10	Data 9	Data 8
Bit 15							Bit 8

Data 7	Data 6	Data 5	Data 4	Data 3	Data 2	Data 1	Data 0
Bit 7							Bit 0

Bit 15-0 ..... Data<15:0>: Data to the Modbus Slave
0x0000
…
0xFFFF

Status

Stat 7	Stat 6	Stat 5	Stat 4	Stat 3	Stat 2	Stat 1	Stat 0
Bit 7							Bit 0

Bit 7-0 Stat<7:0>: Status auf the Transmission
0000 0000 = 0 Nothing send yet
0000 0001 = 1 ILLEGAL FUNCTION
0000 0010 = 2 ILLEGAL DATA ADDRESS
0000 0011 = 3 ILLEGAL DATA VALUE
0000 0100 = 4 SLAVE DEVICE FAILURE
0000 0101 = 5 OK

1.6.20.6.4 Smart Meter

The smart meter operation mode offers the ability to read out moder smart meter.
These smart meters usually communicate via an optical interface (For this purpose use a CAM-SB-D0-Opto-0#). But it´s also possible to communicate with them via wires (RS232/RS485).
This operation mode supports the protocols IEC62056-21 and SML.
It´s able to search for specified obis codes and returns them back (If found) with value, unit and multiplier (kilo, mega, milli etc.).

<u>SubBrick Support:</u>

- CAM-SB-RS485-0#
- CAM-SB-RS232-0#
- CAM-SB-D0-Opto-0#

Out-Userdata **from** Master to Slave total: 30 Bytes			**In**-Userdata **to** Master from Slave total: 30 Bytes		
Byte	Function	rC Assign...	Byte	Function	rC Assign...
Page 1					
0	**Page Select**		0	**Status SubBrick**	
1	**Bit 0 - 6:** **Trigger Counter to SubBrick** *TrigCntToSub* **Bit 7:** Subbrick Sel		1	**Bit 0 - 7:** *AcknCntFromSub*	
2	Reserved		2	**Result Cntr**	
3	Reserved		3	Reserved	
4	**Protocol type**		4	Reserved	
5-29	Reserved		5-29	Reserved	

Page Select
Same as Page 0

Trigger Counter to SubBrick
Same as Page 0

Protocol type

Type 7	Type 6	Type 5	Type 4	Type 3	Type 2	Type 1	Type 0
Bit 7							Bit 0

Bit 7-0..... Type<7:0>: Protocol type
0x01 = SML
0x02 = ASCII (IEC62056-21)

Status SubBrick

Status 4	Status 3	Status 2	Status 1	Status 0	Flag 2	Flag 1	Flag 0
Bit 7				Bit 3	Bit 2	Bit 1	Bit 0

Bit 7-3..... Status<7:3>: Status SubBrick
0x04 = Status_No_Response (Smart meter didn´t replied)
Bit 2-0..... Flag<2:0>: Flag
Bit 0 = Parity Error
Bit 1 = Framing Error
Bit 2 = Buffer overlow (max input obis reached)

Acknowledge Counter from SubBrick

RCount 7	RCount 6	RCount 5	RCount 4	RCount 3	RCount 2	RCount 1	RCount 0
Bit 7							Bit 0

Bit 7-0..... RCount<7:0>: Receive Counter
0x00-0xFF = Counts, if one transfer with the smart meter has been completed

Result Counter

PCount 7	PCount 6	PCount 5	PCount 4	PCount 3	PCount 2	PCount 1	PCount 0
Bit 7							Bit 0

Bit 7-0..... PCount<7:0>: Page Update Counter
0x00-0xFF = Counts, if the data is consistent on the page and ready to read (Counts after every smart meter-transfer, on page change and on subbrick-port change)

Out-Userdata **from** Master to Slave total: 30 Bytes			**In**-Userdata **to** Master from Slave total: 30 Bytes		
Byte	Function	rC Assign...	Byte	Function	rC Assign...
Page 2					
0	**Page Select**		0	**Status SubBrick**	
1	**Bit 0 - 6:** **Trigger Counter to SubBrick** *TrigCntToSub* **Bit 7:** Subbrick Sel		1	**Bit 0 - 7:** *AcknCntFromSub*	
2	**Start**		2	**Result Counter**	
3	Reserved		3	Reserved	
4	**OBIS NUM 1**		4	**Amount of OBIS numbers found**	
5	**OBIS NUM 2**		5	Reserved	
6	**OBIS NUM 3**		6	**Smart meter ID**	
7	Reserved		7	**Smart meter ID**	
8	**OBIS NUM 1**		8	**Smart meter ID**	
9	**OBIS NUM 2**		9	**Smart meter ID**	
10	**OBIS NUM 3**		10	**Smart meter ID**	
11	Reserved		11	**Smart meter ID**	
12	**OBIS NUM 1**		12	**Smart meter ID**	
13	**OBIS NUM 2**		13	**Smart meter ID**	
14	**OBIS NUM 3**		14	**Smart meter ID**	
15	Reserved		15	**Smart meter ID**	
16	**OBIS NUM 1**		16	Reserved	
17	**OBIS NUM 2**		17	Reserved	
18	**OBIS NUM 3**		18	Reserved	
19	Reserved		19	Reserved	
20	**OBIS NUM 1**		20	**ID found**	
21	**OBIS NUM 2**		21	Reserved	
22	**OBIS NUM 3**		22	Reserved	
23	Reserved		23	Reserved	
24	**OBIS NUM 1**		24	Reserved	
25	**OBIS NUM 2**		25	Reserved	
26	**OBIS NUM 3**		26	Reserved	
27	Reserved		27	Reserved	
28	Reserved		28	Reserved	
29	Reserved		29	Reserved	

Page Select
Same as Page 0

Trigger Counter to SubBrick
Same as Page 0

OBIS NUM (same for OBIS NUM 1 & OBIS NUM 2 & OBIS NUM 3)

OBIS 7	OBIS 6	OBIS 5	OBIS 4	OBIS 3	OBIS 2	OBIS 1	OBIS 0
Bit 7							Bit 0

Bit 7-0..... OBIS<7:0>: OBIS NUM
0x00 – 0xFF = OBIS Number to select[1]

[1] An obis search string consists of three numbers (OBIS NUMs) the first number must be "OBIS NUM 1" and the last number must be "OBIS NUM 3 (Similar to OBIS Value group C, D, E)". On one page (page 2…n) is space for six OBIS NUM inputs.

Status SubBrick
Same as Page 0

Acknowledge Counter from SubBrick
Same as Page 0

Result Counter
Same as Page 1

Amount of OBIS numbers found

Found 7	Found 6	Found 5	Found 4	Found 3	Found 2	Found 1	Found 0
Bit 7							Bit 0

Bit 7-0..... Found<7:0>: Amount of OBIS numbers found
0x00-0x3C = Amount of OBIS numbers found

Smart meter ID (same for Byte 6 – Byte 15)

SMID 7	SMID 6	SMID 5	SMID 4	SMID 3	SMID 2	SMID 1	SMID 0
Bit 7							Bit 0

Bit 7-0..... SMID<7:0>: Smart meter ID
0x00-0xFF = Smart Meter ID (1-10Bytes). If protocol type = IEC62056-21 , every byte is an ASCII digit.

ID found

Found 7	Found 6	Found 5	Found 4	Found 3	Found 2	Found 1	Found 0
Bit 7							Bit 0

Bit 7-0..... Found<7:0>:ID found
0x00 = ID not found
0x01-0x0A = ID found, Length in bytes of the ID

Start

SS 7	SS 6	SS 5	SS 4	SS 3	SS 2	SS 1	SS 0

Bit 7	Bit 0

Bit 7-0..... SS<7:0>: Start
0x00 = Idle (Use to initialize)
0x01= Start

Out-Userdata **from** Master to Slave total: 30 Bytes			**In**-Userdata **to** Master from Slave total: 30 Bytes		
Byte	Function	rC Assign...	Byte	Function	rC Assign...
Page 3..n					
0	**Page Select**		0	**Status SubBrick**	
1	**Bit 0 - 6:** **Trigger Counter to SubBrick** *TrigCntToSub* **Bit 7:** Subbrick Sel		1	**Bit 0 - 7:** AcknCntFromSub	
2	**Start**		2	**Result Counter**	
3	Reserved		3	Reserved	
4	**OBIS NUM 1**		4	**Amount of OBIS values found**	
5	**OBIS NUM 2**		5	Reserved	
6	**OBIS NUM 3**		6	**Found OBIS NUM 1**	
7	Reserved		7	**Found OBIS NUM 2**	
8	**OBIS NUM 1**		8	**Found OBIS NUM 3**	
9	**OBIS NUM 2**		9	Reserved	
10	**OBIS NUM 3**		10	**OBIS Value (MSB)**	
11	Reserved		11	**OBIS Value**	
12	**OBIS NUM 1**		12	**OBIS Value**	
13	**OBIS NUM 2**		13	**OBIS Value**	
14	**OBIS NUM 3**		14	**OBIS Value**	
15	Reserved		15	**OBIS Value (LSB)**	
16	**OBIS NUM 1**		16	**OBIS Unit**	
17	**OBIS NUM 2**		17	**Multiplicator**	
18	**OBIS NUM 3**		18	**Found OBIS NUM 1**	
19	Reserved		19	**Found OBIS NUM 2**	
20	**OBIS NUM 1**		20	**Found OBIS NUM 3**	
21	**OBIS NUM 2**		21	Reserved	
22	**OBIS NUM 3**		22	**OBIS Value (MSB)**	
23	Reserved		23	**OBIS Value**	
24	**OBIS NUM 1**		24	**OBIS Value**	
25	**OBIS NUM 2**		25	**OBIS Value**	
26	**OBIS NUM 3**		26	**OBIS Value**	
27	Reserved		27	**OBIS Value (LSB)**	
28	Reserved		28	**OBIS Unit**	
29	Reserved		29	**Multiplicator**	

(Two Found OBIS per page)

Page Select
Same as Page 0

Trigger Counter to SubBrick
Same as Page 0

OBIS NUM (same for OBIS NUM 1 & OBIS NUM 2 & OBIS NUM 3)
Same as Page 2

Status SubBrick
Same as Page 1

Acknowledge Counter from SubBrick
Same as Page 1

Result Counter
Same as Page 1

Amount of OBIS numbers found
Same as Page 2

Found OBIS NUM (same for Found OBIS NUM 1 & Found OBIS NUM 2 & Found OBIS NUM 3)

FOBIS 7	FOBIS 6	FOBIS 5	FOBIS 4	FOBIS 3	FOBIS 2	FOBIS 1	FOBIS 0
Bit 7							Bit 0

Bit 7-0..... FOBIS<7:0>: Found OBIS NUM
0x00 – 0xFF = OBIS Number to select that was found (Equal to the “OBIS NUM”, which was entered as input)

OBIS Value (6 Bytes)

Value	Value	Value	Value	Value	Value	Value	Value
Bit 47							Bit 0

Bit 47-0..... Value<47:0>: Value
0x00 – 0xFFFFFFFFFFFF = Value of the found OBIS Number

OBIS Unit

Unit 7	Unit 6	Unit 5	Unit 4	Unit 3	Unit 2	Unit 1	Unit 0
Bit 7							Bit 0

Bit 7-0..... Unit<7:0>: OBIS Unit
0x00 = Unit not found
0x01 = W
0x02 = Wh
0x03 =VArh
0x04 = V
0x05 = A
0x06 = VA

Multiplicator

Multi 7	Multi 6	Multi 5	Multi 4	Multi 3	Multi 2	Multi 1	Multi 0
Bit 7							Bit 0

Bit 7-0..... Multi<7:0>: Multiplicator
0x00 = No Multiplicator
0x01 = k (Kilo)
0x02 =M (Mega)
0x03 = m (milli)

Start
Same as page 2

Buffers/Maximums:
Max. Input OBIS search strings: 60

Communication:
Data protocol: IEC62056-21:

- Peripheral: 2x UART (Port A and Port B)
- Baudrate: 300bd
- Data Format: 7 Data Bits, Even Parity, 1 Stop Bit

Data protocol: SML:

- Peripheral: 2x UART (Port A and Port B)
- Baudrate: 9600bd
- Data Format: 8 Data Bits, No Parity, 1 Stop Bit

Status/Flags:
Flags:

- Parity Error:
  - Gets cleared when the Receive Counter increases
- Framing Error:
  - Gets cleared when the Receive Counter increases
- Buffer Overflow:
  - If this flag occurs, the maximum amount of ”Input OBIS search strings” has been reached.

Status:
Status_No_Response: Smart meter didn´t replied for a while.

Programming Note:
The following example shows an example, with an actual smart meter. This smart meter is using the protocol „SML“.
We want to get the meter reading and the current power consumption.
The SubBrick is on Port A.

Page 0:
At first, choose the *operation mode(P0)* (In this case „smart meter“).
Then the *command counter(P0)* must be counted up.

Out Userdata

Page	0	Page
Counter_In	1	Command counter
Output_2	4	Operation mode
Output_3	0	
Output_4	0	
Output_5	0	
Output_6	0	
Output_7	0	
Output_8	0	
Output_9	0	
Output_10	0	
Output_11	0	
Output_12	0	
Output_13	0	
Output_14	0	
Output_15	0	
Output_16	0	
Output_17	0	
Output_18	0	
Output_19	0	
Output_20	0	
Output_21	0	
Output_22	0	
Output_23	0	
Output_24	0	
Output_25	0	
Output_26	0	
Output_27	0	
Output_28	0	
Output_29	0	

In Userdata

Status	24	Status Brick ->Now "Operation_Mode_Changed"
Counter_Out	0	
Input_2	3	SubBrickID
Input_3	0	
Input_4	0	
Input_5	0	
Input_6	0	
Input_7	0	
Input_8	0	
Input_9	0	
Input_10	0	
Input_11	0	
Input_12	0	
Input_13	0	
Input_14	0	
Input_15	0	
Input_16	0	
Input_17	0	
Input_18	0	
Input_19	0	
Input_20	0	
Input_21	0	
Input_22	0	
Input_23	0	
Input_24	0	
Input_25	0	
Input_26	0	
Input_27	0	
Input_28	0	
Input_29	0	

Page 1:

On page 1 it is only necessary to select the *protocol type(P1)* with which the meter to be read is used. To confirm the setting, the *command counter(P1)* must be increased again.

Out Userdata

Page	1	Page
Counter_In	2	Command counter
Output_2	0	
Output_3	0	
Output_4	1	Protocol type
Output_5	0	
Output_6	0	
Output_7	0	
Output_8	0	
Output_9	0	
Output_10	0	
Output_11	0	
Output_12	0	
Output_13	0	
Output_14	0	
Output_15	0	
Output_16	0	
Output_17	0	
Output_18	0	
Output_19	0	
Output_20	0	
Output_21	0	
Output_22	0	
Output_23	0	
Output_24	0	
Output_25	0	
Output_26	0	
Output_27	0	
Output_28	0	
Output_29	0	

In Userdata

Status	24	Status Brick
Counter_Out	0	
Input_2	0	
Input_3	0	
Input_4	0	
Input_5	0	
Input_6	0	
Input_7	0	
Input_8	0	
Input_9	0	
Input_10	0	
Input_11	0	
Input_12	0	
Input_13	0	
Input_14	0	
Input_15	0	
Input_16	0	
Input_17	0	
Input_18	0	
Input_19	0	
Input_20	0	
Input_21	0	
Input_22	0	
Input_23	0	
Input_24	0	
Input_25	0	
Input_26	0	
Input_27	0	
Input_28	0	
Input_29	0	

Page 2:

Now the OBIS code numbers that are to be searched for are specified on page 2-n. Up to 6 OBIS codes can be specified on each page.
For example, if the code "1.8.0" is required, *OBIS NUM1(P2)* must be set to 1, *OBIS NUM2(P2)* to 8 and *OBIS NUM3(P3)* to 0.
In order to send the OBIS codes entered on the page, the *command counter(P2)* must be increased again.

When all the required OBIS codes have been set, the *Start(P2-N)* on page 2-n must be set to 1 and then the *command counter(P2)* must get increased to start the communication.
Now is the configuration of the module done and it will automatically hold the connection with the smart meter.

On page 2 the *smart meter id(P2)* is sent.

Out Userdata

Page	2	Page
Counter_In	3	Command counter
Output_2	1	Start
Output_3	0	
Output_4	16	OBIS Numbers for current power consumption
Output_5	7	
Output_6	0	
Output_7	0	
Output_8	1	OBIS number for meter reading
Output_9	8	
Output_10	0	
Output_11	0	
Output_12	0	
Output_13	0	
Output_14	0	
Output_15	0	
Output_16	0	
Output_17	0	
Output_18	0	
Output_19	0	
Output_20	0	
Output_21	0	
Output_22	0	
Output_23	0	
Output_24	0	
Output_25	0	
Output_26	0	
Output_27	0	
Output_28	0	
Output_29	0	

In Userdata

Status	0	
Counter_Out	1	Receive Counter (1 = One transfer with the smart meter)
Input_2	1	Page Update Counter (Data from first transfer are consistent on the page)
Input_3	0	
Input_4	2	Amount of OBIS number found (All searched were found)
Input_5	0	
Input_6		Smart meter ID
Input_7		
Input_8		
Input_9		
Input_10		
Input_11		
Input_12		
Input_13		
Input_14		
Input_15		
Input_16	0	
Input_17	0	
Input_18	0	
Input_19	0	
Input_20	10	ID found (Length = 10)
Input_21	0	
Input_22	0	
Input_23	0	
Input_24	0	
Input_25	0	
Input_26	0	
Input_27	0	
Input_28	0	
Input_29	0	

<u>Page 3-n:</u>
The OBIS codes found are on pages 3-n (2 per page).
Amount of OBIS numbers found(P2-N) indicates how many OBIS codes were found in total.

Out Userdata

Page	3	Page
Counter_In	3	Command counter
Output_2	1	Start
Output_3	0	
Output_4	16	OBIS Numbers for current power consumption
Output_5	7	
Output_6	0	
Output_7	0	
Output_8	1	OBIS number for meter reading
Output_9	8	
Output_10	0	
Output_11	0	
Output_12	0	
Output_13	0	
Output_14	0	
Output_15	0	
Output_16	0	
Output_17	0	
Output_18	0	
Output_19	0	
Output_20	0	
Output_21	0	
Output_22	0	
Output_23	0	
Output_24	0	
Output_25	0	
Output_26	0	
Output_27	0	
Output_28	0	
Output_29	0	

In Userdata

Status	0	
Counter_Out	1	Receive Counter (1 = One transfer with the smart meter)
Input_2	2	Page Update Counter (Data from first transfer are consistent on the page)
Input_3	0	
Input_4	2	Amount of OBIS number found (All searched were found)
Input_5	0	
Input_6	16	OBIS code 2
Input_7	7	
Input_8	0	
Input_9	0	
Input_10	0	Value -> 0
Input_11	0	
Input_12	0	
Input_13	0	
Input_14	0	
Input_15	0	
Input_16	1	Unit -> W
Input_17	0	Multiplier -> No Multiplier
Input_18	1	OBIS code 1
Input_19	8	
Input_20	0	
Input_21	0	
Input_22	0	Value -> 2205
Input_23	0	
Input_24	0	
Input_25	0	
Input_26	8	
Input_27	157	Unit -> Wh
Input_28	2	
Input_29	0	Multiplier -> 0

<u>Formula:</u>
Value * Multiplier (Unit)

So the first OBIS code (16.7. 0, curr. Power consumption) is 0 * 1 (No multiplier) and the unit is W.
➔ 0W, because there isn´t any load connected.

The second OBIS code (1.8.0, meter reading) is 2205 * 1 (No multiplier) and the unit is Wh.

➔ 2205 Wh / 2.205 kWh.

1.6.20.6.5 Smart Meter 8x

This operation mode can read several smart meters by multiplexing them.
Itsvery similar to the operation mode “Smart Meter” but it searches for fixed obis codes (1.8.0, 2.8.0, 16.7.0) and only supports the protocol type SML.

SubBrick Support:

- CAM-SB-5RS232Multi-0#

Out-Userdata **from** Master to Slave total: 30 Bytes			**In**-Userdata **to** Master from Slave total: 30 Bytes		
Byte	Function	rC Assign...	Byte	Function	rC Assign...
Page 1,3,5,7,9,11,13,15					
0	**Page**		0	**Status SubBrick**	
1	**Bit 0 - 6:** **Trigger Counter to SubBrick** *TrigCntToSub* **Bit 7:** Subbrick Sel		1	**Bit 0 - 7:** Receive Counter	
2	**Start**		2	**Page Update Counter**	
3	Reserved		3	Reserved	
4	**Amount of Smart meter**		4	**Amount of OBIS numbers found**	
5	Reserved		5	**Current Smart meter**	
6	Reserved		6	**Smart meter ID**	
7	Reserved		7	**Smart meter ID**	
8	Reserved		8	**Smart meter ID**	
9	Reserved		9	**Smart meter ID**	
10	Reserved		10	**Smart meter ID**	
11	Reserved		11	**Smart meter ID**	
12	Reserved		12	**Smart meter ID**	
13	Reserved		13	**Smart meter ID**	
14	Reserved		14	**Smart meter ID**	
15	Reserved		15	**Smart meter ID**	

16	Reserved		16	**ID found**	
17	Reserved		17	Reserved	
18	Reserved		18	**OBIS NUM 1**	
19	Reserved		19	**OBIS NUM 2**	
20	Reserved		20	**OBIS NUM 3**	
21	Reserved		21	Reserved	
22	Reserved		22	**OBIS Value (MSB)**	
23	Reserved		23	**OBIS Value**	
24	Reserved		24	**OBIS Value**	
25	Reserved		25	**OBIS Value**	
26	Reserved		26	**OBIS Value**	
27	Reserved		27	**OBIS Value (LSB)**	
28	Reserved		28	**OBIS Unit**	
29	Reserved		29	**Multiplicator**	

Page
Same as Page 0

Trigger Counter to SubBrick
Same as Page 0

Status SubBrick

Status 4	Status 3	Status 2	Status 1	Status 0	Flag 2	Flag 1	Flag 0
Bit 7				Bit 3	Bit 2	Bit 1	Bit 0

Bit 7-3..... Status<7:3>: Status SubBrick
0x04 = Status_No_Response: Smart meter didn´t replied
Bit 2-0..... Flag<2:0>: Flag
Bit 0 = Parity Error
Bit 1 = Framing Error
Bit 2 = Reserved

Receive Counter

RCount 7	RCount 6	RCount 5	RCount 4	RCount 3	RCount 2	RCount 1	RCount 0
Bit 7							Bit 0

Bit 7-0..... RCount<7:0>: Receive Counter
0x00-0xFF = Counts, if the transfer with all smart meter is done.

Page Update Counter

PCount 7	PCount 6	PCount 5	PCount 4	PCount 3	PCount 2	PCount 1	PCount 0
Bit 7							Bit 0

Bit 7-0..... PCount<7:0>: Page Update Counter
0x00-0xFF = Counts, if the data is consistent on the page and ready to read (Counts after all smart meter have sent their data and on page change)

Amount of OBIS numbers found

Found 7	Found 6	Found 5	Found 4	Found 3	Found 2	Found 1	Found 0
Bit 7							Bit 0

Bit 7-0..... Found<7:0>: Amount of OBIS numbers found
0x00-0x03 = Amount of OBIS numbers found

Current Smart meter

Curr 7	Curr 6	Curr 5	Curr 4	Curr 3	Curr 2	Curr 1	Curr 0
Bit 7							Bit 0

Bit 7-0..... Curr<7:0>: Current Smart meter
0x00-0x0F = Current sending smart meter[1]

[1]*The Subbrick Status Flags are relating to the current smart meter.*

Smart meter ID (same for Byte 6 – Byte 15)

SMID 7	SMID 6	SMID 5	SMID 4	SMID 3	SMID 2	SMID 1	SMID 0
Bit 7							Bit 0

Bit 7-0..... SMID<7:0>: Smart meter ID
0x00-0xFF = Smart Meter ID (1-10Bytes).

ID found

Found 7	Found 6	Found 5	Found 4	Found 3	Found 2	Found 1	Found 0
Bit 7							Bit 0

Bit 7-0..... Found<7:0>:ID found
0x00 = ID not found
0x01-0x0A = ID found, Length in bytes of the ID

Start

SS 7	SS 6	SS 5	SS 4	SS 3	SS 2	SS 1	SS 0
Bit 7							Bit 0

Bit 7-0..... SS<7:0>: Start
0x00 = Idle (Use to initialize)
0x01= Start

Amount of smart meter

Sam 7	Sam 6	Sam 5	Sam 4	Sam 3	Sam 2	Sam 1	Sam 0
Bit 7							Bit 0

Bit 7-0..... Sam<7:0>: Amount of smart meter

0x01 – 0x08 = Amount of smart meter

Found OBIS NUM (same for Found OBIS NUM 1 & Found OBIS NUM 2 & Found OBIS NUM 3)

FOBIS 7	FOBIS 6	FOBIS 5	FOBIS 4	FOBIS 3	FOBIS 2	FOBIS 1	FOBIS 0
Bit 7							Bit 0

Bit 7-0..... FOBIS<7:0>: Found OBIS NUM
0x00 – 0xFF = OBIS Number that was found

OBIS Value (6 Bytes)

Value	Value	Value	Value	Value	Value	Value	Value
Bit 47							Bit 0

Bit 47-0..... Value<47:0>: Value
0x00 – 0xFFFFFFFFFFFF = Value of the found OBIS Number

OBIS Unit

Unit 7	Unit 6	Unit 5	Unit 4	Unit 3	Unit 2	Unit 1	Unit 0
Bit 7							Bit 0

Bit 7-0..... Unit<7:0>: OBIS Unit
0x00 = Unit not found
0x01 = W
0x02 = Wh
0x03 =VArh
0x04 = V
0x05 = A
0x06 = VA

Multiplicator

Multi 7	Multi 6	Multi 5	Multi 4	Multi 3	Multi 2	Multi 1	Multi 0
Bit 7							Bit 0

Bit 7-0..... Multi<7:0>: Multiplicator
0x00 = No Multiplicator
0x01 = k (Kilo)
0x02 =M (Mega)
0x03 = m (milli)

Out-Userdata **from** Master to Slave total: 30 Bytes			**In**-Userdata **to** Master from Slave total: 30 Bytes		
Byte	Function	rC Assign...	Byte	Function	rC Assign...
Page 2,4,6,8,10,12,14,16					
0	**Page**		0	**Status SubBrick**	
1	**Bit 0 - 6:** **Trigger Counter to SubBrick** *TrigCntToSub* **Bit 7:** Subbrick Sel		1	**Bit 0 - 7:** Receive Counter	
2	**Start**		2	**Page Update Counter**	
3	Reserved		3	Reserved	
4	**Amount of Smart meter**		4	**Amount of OBIS numbers found**	
5	Reserved		5	**Current Smart meter**	
6	Reserved		6	**OBIS NUM 1**	
7	Reserved		7	**OBIS NUM 2**	
8	Reserved		8	**OBIS NUM 3**	
9	Reserved		9	Reserved	
10	Reserved		10	**OBIS Value (MSB)**	
11	Reserved		11	**OBIS Value**	
12	Reserved		12	**OBIS Value**	
13	Reserved		13	**OBIS Value**	
14	Reserved		14	**OBIS Value**	
15	Reserved		15	**OBIS Value (LSB)**	
16	Reserved		16	**OBIS Unit**	
17	Reserved		17	**Multiplicator**	
18	Reserved		18	**OBIS NUM 1**	
19	Reserved		19	**OBIS NUM 2**	
20	Reserved		20	**OBIS NUM 3**	
21	Reserved		21	Reserved	
22	Reserved		22	**OBIS Value (MSB)**	
23	Reserved		23	**OBIS Value**	
24	Reserved		24	**OBIS Value**	
25	Reserved		25	**OBIS Value**	
26	Reserved		26	**OBIS Value**	
27	Reserved		27	**OBIS Value (LSB)**	
28	Reserved		28	**OBIS Unit**	
29	Reserved		29	**Multiplicator**	

Page
Same as Page 0

Trigger Counter to SubBrick
Same as Page 0

Status SubBrick
Same as Page 1,3,5…

Receive Counter
Same as Page 0

Page Update Counter
Same as Page 1,3,5…

Amount of OBIS numbers found
Same as Page 1,3,5…

Current Smart meter
Same as Page 1,3,5…

Smart meter ID (same for Byte 6 – Byte 15)
Same as Page 1,3,5…

ID found
Same as Page 1,3,5…

Start
Same as Page 1,3,5…

Amount of smart meter
Same as Page 1,3,5…

Found OBIS NUM
Same as Page 1,3,5…

OBIS Value (6 Bytes)
Same as Page 1,3,5…

OBIS Unit
Same as Page 1,3,5…

Multiplicators
Same as Page 1,3,5…

Programming Note:

This module searches the ID of the smart meter and three OBIS Numbers: 1.8.0, 2.8.0, 16.7.0. Supporting only the protocol SML.

Multiplexer Pins:

S0 – Pin 12
S1 – Pin 14
S2 – Pin 16
EN – Pin 20
Z(RX) – Pin 8

1.6.20.6.6 Fast Sampling

SubBrick Support:

- CAM-2SB-AI-0#
- CAM-2SB-SPI-0#
- CAM-2SB-I2C-0#

5.1.1.1.1.1 Page 1, Fast Sampling extern ADC

Out-Userdata **from** Master to Slave total: 28 Bytes			**In**-Userdata **to** Master from Slave total: 28 Bytes		
Byte	Function	rC Assign...	Byte	Function	rC Assign...
Page 1					
0	Input Page/Mode Selection Bit 0 – 4: Page ≡ 0001 Bit 5 – 8: Mode: See below	... + eB_B0, 0, 0, ...	0		... + eB_B0, 0, 0, ...
1	Trigger Counter 0…255	... + eB_B1, 0, ...	1	Acknowledge Counter 0…255	... + eB_B1, 0, ...
2, 3	SampleBlockSelection 1…999 ≡ 0 = keine gültigen Daten	... + eB_W1, 0, ...	2, 3	SampleBlockAct 1…999 ≡ 0 = keine gültigen Daten	... + eB_W1, 0, ...
4	ADC-Range 1,2	... + eB_B4, 0, ...	4, 5	SampleBlockData 1 See below	... + eB_W2, 0, ...
5	ADC-Range 3,4	... + eB_B5, 0, ...			
6	InputSelection	... + eB_B6, 0, ...	6, 7	…	... + eB_W3, 0, ...
7	SampleRate	... + eB_B7, 0, ...			
8, 9	SampleNumber	... + eB_W4, 0, ...	8, 9	…	... + eB_W4, 0, ...
10, 11	Trigger Level	... + eB_W5, 0, ...	10, 11	…	... + eB_W5, 0, ...
12	Trigger Channel	... + eB_B12, 0	12, 13	…	... + eB_W6, 0, ...
13	Trigger Mode	... + eB_B13, 0			
14, 15	not used	... + eB_W7, 0, ...	14, 15	…	... + eB_W7, 0, ...
16, 17	not used	... + eB_W8, 0, ...	16, 17	…	... + eB_W8, 0, ...
18, 19	not used	... + eB_W9, 0, ...	18, 19	…	... + eB_W9, 0, ...
20, 21	not used	... + eB_W9, 0, ...	20, 21	…	... + eB_W10, 0, ...
22, 23	not used	... + eB_W9, 0, ...	22, 23	…	... + eB_W11, 0, ...
24, 25	not used	... + eB_W9, 0, ...	24, 25	…	... + eB_W12, 0, ...
26, 27	not used	... + eB_W9, 0, ...	26, 27	SampleBlockData 12 See below	... + eB_W13, 0, ...
28,29			28,29	SampleBlockAct 1…999 ≡ 0 = keine gültigen Daten	

Input Page/ Mode

Mode3	Mode2	Mode1	Mode0	PA3	PA2	PA1	PA0
Bit 7							Bit 0

Bit 7-4 ..... Mode<4:0>: Operation Mode (Little Endian)
0000b = Easy Mode
0001b = Continuous Sample
0010b = One Shot Sample
0011b = Triggered Mode
further Modes under Development

Bit 3-0 ..... Page<4:0>: Switching Pages for advanced measuring modes
0000 = Page 0 Init
0001 = Page 1 externer ADC
0010 = Page 2 interner ADC
0011 = Page 3 Sensor IIS3DWB
…
1111 = Page 16

Trigger Counter

in One Shot Mode:
The change of this value triggers a OneShot-Sample

in Triggered Mode:
The change of this value activates the triggers detection

Acknowledge Counter

Signalizes that the current measurement is done (data is available to read by Host).

sampleBlockSelection

The Host can select or request a buffer area to read 12 words (sampled data) from this location.

sampleBlockAct

Indicates which buffer area was previously selected and send to Host. This value will only be set, if all 12 words of sample data are written into brickBUS Tx Buffer.

sampleNumber

Amount of data to be sampled (only valid in Oneshot-/ Triggered Modus). Der Datenbuffer besitzt eine Größe von 20 kByte.

SampleBlockData[1..12]

12 words of ADC data. If multiple Inputs are sampled, the samples will be organized in sequentiell order, which means:
sampleInput1, sampleInput2, sampleInput3, sampleInput4,
sampleInput1, sampleInput2, sampleInput3, sampleInput4, …

ADC-Range12

ADC-Range Input 2	ADC-Range Input 1
Bit 7	Bit 0

Bit 4 – 7: ..... rangeMode Input 2:
Determines the input voltage range of Inputs 2 of extADC.

Bit 0 – 3: ..... rangeMode Input 1:
Determines the input voltage range of Inputs 1 of extADC.

ADC-Range34

ADC-Range Input 4	ADC-Range Input 3
Bit 7	Bit 0

Bit 4 – 7: ..... rangeMode Input 4:
Determines the input voltage range of Inputs 4 of extADC.

Bit 0 – 3: ..... rangeMode Input 3:
Determines the input voltage range of Inputs 3 of extADC.

InputSelect:

InputSelect<7:0>	
Bit 7	Bit 0

Bit 0 – 7: ..... inputSelect (Input Channel Select)
Enables the choosen Inputs for sampling.

0x0	No Input selected
0x1	Input 0
0x2	Input 1
0x3	Input 0, 1
0x4	Input 2
0x5	Input 0, 2
0x6	Input 1, 2
0x7	Input 0, 1, 2
0x8	Input 3
0x9	Input 0, 3
0xA	Input 1, 3
0xB	Input 0, 1, 3
0xC	Input 2, 3
0xD	Input 0, 2, 3
0xE	Input 1, 2, 3
0xF	Input 0, 1, 2, 3

SampleRate:

SampleRate<7:0>	
Bit 7	Bit 0

Bit 0 – 7: ..... Samplerate
Specifies the Sampelrate used for ADC sampling

0x00	2 kHz
0x01	5 kHz
0x02	10 kHz
0x03	20 kHz
0x04	50 kHz
0x05	100 kHz
0x06	200 kHz

Trigger Level (not yet implemented !)

ADC-Level, der den Trigger gem. untenstehender Bedingung auslöst

Trigger Mode (not yet implemented !)

TriggerMode<3:0>	
7	0

Bit 0 – 3: ..... TriggerMode
Bit pattern that activates the desired trigger type

0x0	ADC-Value over level
0x1	ADC-Value under level
0x2	ADC-Value has exceeded level (rise)
0x3	ADC-Value hat fallen below level (rise)

Trigger Channel (not yet implemented !)

TriggerChannel<3:0>	
7	0

Bit 0 – 3: TriggerChannel
ADC channel which is used for triggering

0x0	Channel 1
0x1	Channel 2
0x2	Channel 3
0x3	Channel 4

5.1.1.1.1.2 Page 2, Fast Sampling intern ADC

Out-Userdata **from** Master to Slave total: 28 Bytes			**In**-Userdata **to** Master from Slave total: 28 Bytes		
Byte	Function	rC Assign...	Byte	Function	rC Assign...
Page 1					
0	Input Page/Mode Selection Bit 0 - 4 Page ≡ 0010 Bit 5 - 8 Mode: See below	... + eB_B0, 0, 0, ...	0		... + eB_B0, 0, 0, ...
1	Input Counter 0…255	... + eB_B1, 0, ...	1	Output counter (not used) 0…255	... + eB_B1, 0, ...
2, 3	SampleBlockSelection 1…999 ≡ 0 = keine gültigen Daten	... + eB_W1, 0, ...	2, 3	SampleBlockAct 1…999 ≡ 0 = keine gültigen Daten	... + eB_W1, 0, ...
4	ChnlSelect	... + eB_B4, 0, ...	4, 5	SampleBlockData 1 See below	... + eB_W2, 0, ...
5		... + eB_B5, 0, ...			
6	InputSelection	... + eB_B6, 0, ...	6, 7		... + eB_W3, 0, ...
7	SampleRate	... + eB_B7, 0, ...			
8, 9	SampleNumber	... + eB_W4, 0, ...	8, 9		... + eB_W4, 0, ...
10, 11	Trigger Level	... + eB_W5, 0, ...	10, 11		... + eB_W5, 0, ...
12	Trigger Channel	... + eB_B12, 0	12, 13		... + eB_W6, 0, ...
13	Trigger Mode	... + eB_B13, 0			
14, 15	not used	... + eB_W7, 0, ...	14, 15		... + eB_W7, 0, ...
16, 17	not used	... + eB_W8, 0, ...	16, 17		... + eB_W8, 0, ...
18, 19	not used	... + eB_W9, 0, ...	18, 19		... + eB_W9, 0, ...
20, 21	not used	... + eB_W9, 0, ...	20, 21		... + eB_W10, 0, ...
22, 23	not used	... + eB_W9, 0, ...	22, 23		... + eB_W11, 0, ...
24, 25	not used	... + eB_W9, 0, ...	24, 25		... + eB_W12, 0, ...
26, 27	not used	... + eB_W9, 0, ...	26, 27	SampleBlockData 12 See below	... + eB_W13, 0, ...

Input Page/ Mode

Mode3	Mode2	Mode1	Mode0	PA3	PA2	PA1	PA0
Bit 7							Bit 0

Bit 7-4 ..... Mode<4:0>: Operation Mode (Little Endian)
0000b = Easy Mode
0001b = Continuous Sample
0010b = One Shot Sample
0011b = Triggered Mode
further Modes under Development

Bit 3-0 ..... Page<4:0>: Switching Pages for advanced measuring modes
0000 = Page 0 Init
0001 = Page 1 externer ADC
0010 = Page 2 interner ADC
0011 = Page 3 Sensor IIS3DWB
…
1111 = Page 16

Trigger Counter

in One Shot Mode:
The change of this value triggers a OneShot-Sample

in Triggered Mode:
The change of this value activates the triggers detection

Acknowledge Counter

Signalizes that the current measurement is done (data is available to read by Host).

sampleBlockSelection

The Host can select or request a buffer area to read 12 words (sampled data) from this location.

sampleBlockAct

Indicates which buffer area was previously selected and send to Host. This value will only be set, if all 12 words of sample data are written into brickBUS Tx Buffer.

sampleNumber

Amount of data to be sampled (only valid in Oneshot-/ Triggered Modus). Der Datenbuffer besitzt eine Größe von 20 kByte.

SampleBlockData[1..12]

12 words of ADC data. If multiple Inputs are sampled, the samples will be organized in sequentiell order, which means:
sampleInput1, sampleInput2, sampleInput3, sampleInput4,
sampleInput1, sampleInput2, sampleInput3, sampleInput4, …

InputSelect:

InputSelect<7:0>	
Bit 7	Bit 0

Bit 0 – 7: ..... inputSelect (Input Select)
Enables the choosen Inputs for sampling

0x0	no input selected
0x1	Input1(AN4)
0x2	Input2(AN5)
0x3	Input1(AN4),Input2(AN5)
0x4	Input3(AN6)
0x5	Input1(AN4),Input3(AN6)
0x6	Input2(AN5),Input3(AN6)
0x7	Input1(AN4),Input2(AN5),Input3(AN6)
0x8	Input4(AN7)
0x9	Input1(AN4),Input4(AN7)
0xA	Input2(AN5),Input4(AN7)
0xB	Input1(AN4),Input2(AN5),Input4(AN7)
0xC	Input3(AN6),Input4(AN7)
0xD	Input1(AN4),Input3(AN6),Input4(AN7)
0xE	Input2(AN5),Input3(AN6),Input4(AN7)
0xF	Input1(AN4) - Input4(AN7)

SampleRate:

SampleRate<7:0>	
Bit 7	Bit 0

Bit 0 – 7: ..... Sample frequency
Parameter to choose the sample frequency.

0x02	10 kHz
0x03	20 kHz
0x04	50 kHz
0x05	100 kHz
0x06	200 kHz
0x07	500 kHz

Trigger Level (coming soon)

TriggerLevel<7:0>	
Bit 7	Bit 0

Bit 0 – 7: ..... TriggerLevel

Trigger Mode (coming soon)

TriggerMode<7:0>	
7	0

Bit 0 – 7: ..... TriggerMode
Bit pattern that activates the desired trigger type

0x0	ADC-Value over level
0x1	ADC-Value under level
0x2	ADC-Value has exceeded level (rise)
0x3	ADC-Value hat fallen below level (rise)

Trigger Channel (coming soon)

InputSelect<3:0>	
7	0

Bit 0 – 3: TriggerChannel
ADC channel which is used for triggering

0x0	Channel 1
0x1	Channel 2
0x2	Channel 3
0x3	Channel 4

5.1.1.1.1.3 Page 3, Fast Sampling IIS3DWB

Out-Userdata **from** Master to Slave total: 28 Bytes			**In**-Userdata **to** Master from Slave total: 28 Bytes		
Byte	Function	rC Assign...	Byte	Function	rC Assign...
Page 1					
0	Input Page/Mode Selection Bit 0 - 4 Page ≡ 0010 Bit 5 - 8 Mode: See below	... + eB_B0, 0, 0, ...	0		... + eB_B0, 0, 0, ...
1	Input Counter 0…255	... + eB_B1, 0, ...	1	Output counter (not used) 0…255	... + eB_B1, 0, ...
2, 3	SampleBlockSelection 1…999 ≡ 0 = keine gültigen Daten	... + eB_W1, 0, ...	2, 3	SampleBlockAct 1…999 ≡ 0 = keine gültigen Daten	... + eB_W1, 0, ...
4		... + eB_B4, 0, ...	4, 5	SampleBlockData 1 See below	... + eB_W2, 0, ...
5		... + eB_B5, 0, ...			
6		... + eB_B6, 0, ...	6, 7		... + eB_W3, 0, ...
7		... + eB_B7, 0, ...			
8, 9		... + eB_W4, 0, ...	8, 9		... + eB_W4, 0, ...
10, 11		... + eB_W5, 0, ...	10, 11		... + eB_W5, 0, ...
12		... + eB_B12, 0	12, 13		... + eB_W6, 0, ...
13		... + eB_B13, 0			
14, 15	not used	... + eB_W7, 0, ...	14, 15		... + eB_W7, 0, ...
16, 17	not used	... + eB_W8, 0, ...	16, 17		... + eB_W8, 0, ...
18, 19	not used	... + eB_W9, 0, ...	18, 19		... + eB_W9, 0, ...
20, 21	not used	... + eB_W9, 0, ...	20, 21		... + eB_W10, 0, ...
22, 23	not used	... + eB_W9, 0, ...	22, 23		... + eB_W11, 0, ...
24, 25	not used	... + eB_W9, 0, ...	24, 25		... + eB_W12, 0, ...
26, 27	not used	... + eB_W9, 0, ...	26, 27	SampleBlockData 12 See below	... + eB_W13, 0, ...

Input Page/ Mode

Mode3	Mode2	Mode1	Mode0	PA3	PA2	PA1	PA0
Bit 7							Bit 0

Bit 7-4 ..... Mode<4:0>: Operation Mode (Little Endian)
0000b = Easy Mode
0001b = Continuous Sample
0010b = One Shot Sample
0011b = Triggered Mode
further Modes under Development

Bit 3-0 ..... Page<4:0>: Switching Pages for advanced measuring modes
0000 = Page 0 Init
0001 = Page 1 externer ADC
0010 = Page 2 interner ADC
0011 = Page 3 Sensor IIS3DWB
…
1111 = Page 16

inputCount

One Shot Mode:
The change of this value triggers a OneShot-Measurement

Triggered Mode:
The change of this value activates the trigger detection. A OneShot-Measurement will be started if trigger is hit.

outputCount

Signalizes an executed sample (data are available to read).

sampleBlockSelection

Value selects the Sample-Block, which will be made available in the process image of the brick (at the latest during the next bus update cycle). (Only relevant in Oneshot mode).

sampleNumber

Number of data to be sampled (only relevant in one shot mode).
Range: 1..7500 / 1..3750 / 1..2500 / 1..1875 with 1/2/3/4 inputs each

sampleBlockAct

In OneShot mode:
Number of the current SampleBlockSelection that is transferred from the brick back to the host PC

SampleBlockData[1..12]

Contains 12 ADC values. If several inputs are sampled, the data is stored in ascending order, i.e. Input1, Input2, Input3, Input4,
Input1, Input2, Input3, Input4, ...

InputSelect:

InputSelect<7:0>	
Bit 7	Bit 0

Bit 0 – 7: ..... inputSelect (Input Select)
Bit pattern that assigns a positive input pin to channel 0.

0x0	no input selected
0x1	Input1(AN4)
0x2	Input2(AN5)
0x3	Input1(AN4),Input2(AN5)
0x4	Input3(AN6)
0x5	Input1(AN4),Input3(AN6)
0x6	Input2(AN5),Input3(AN6)
0x7	Input1(AN4),Input2(AN5),Input3(AN6)
0x8	Input4(AN7)
0x9	Input1(AN4),Input4(AN7)
0xA	Input2(AN5),Input4(AN7)
0xB	Input1(AN4),Input2(AN5),Input4(AN7)
0xC	Input3(AN6),Input4(AN7)
0xD	Input1(AN4),Input3(AN6),Input4(AN7)
0xE	Input2(AN5),Input3(AN6),Input4(AN7)
0xF	Input1(AN4) - Input4(AN7)

SampleRate:

SampleRate<7:0>	
Bit 7	Bit 0

Bit 0 – 7: ..... Sample freqeuncy
Parameter to choose the sample frequency.

Trigger Level (coming soon)

TriggerLevel<7:0>	
Bit 7	Bit 0

Bit 0 – 7: ..... TriggerLevel

Trigger Mode (coming sson)

TriggerMode<7:0>	
7	0

Bit 0 – 7: ..... TriggerMode
Bit pattern that activates the desired trigger type

0x0	ADC-Value over level
0x1	ADC-Value under level
0x2	ADC-Value has exceeded level (rise)
0x3	ADC-Value hat fallen below level (rise)
0x4	
0x5	
0x6	
0x7	
0x8	
0x9	
0xA	
0xB	
0xC	
0xD	
0xE	

Trigger Channel (coming soon)

InputSelect<3:0>	
7	0

Bit 0 – 3: TriggerChannel
ADC channel which is used for triggering

0x0	Channel 1
0x1	Channel 2
0x2	Channel 3
0x3	Channel 4
0x4	
0x5	
0x6	
0x7	
0x8	
0x9	
0xA	
0xB	
0xC	
0xD	
0xE	

1.6.20.7 RS485 used as an expanded IO-Port

In TCP/IP mode, the RS485-Interface can be used as an additional IO interface for the coupling and support of serial data devices. Further information on request.

1.6.21 SubBricks for ComSens

1.6.21.1 CAM-2SB-ImpTmp-0#

SubBrick-ID: 1 (980 Ohm)

1.6.21.1.1 Brief Description

With the CAM-2SB-ImpTmp module can be measured impedance and temperature.

1.6.21.1.2 Connectors and Indication-/Operation-Elements

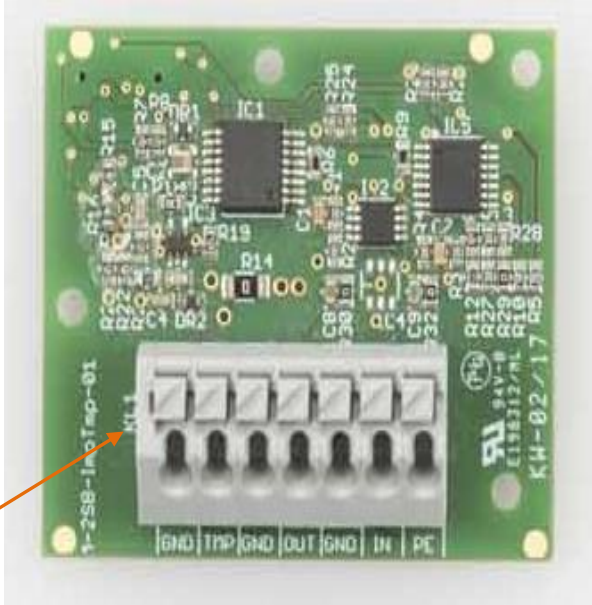

Terminals
1…7 (from left to right)

1.6.21.1.3 Terminal assingment

Ter.	Function	Usage
1	Temperature	GND
2		Temperature
3	Frequency measure	Analog GND
4		Output frequency measure
5		Analog GND
6		Input frequency measure
7	PE	GND

- **Measure Ranges**

Output frequency:..... 10 Hz – 100 kHz
Output amplitude DC:..... 1,48V/0,76V/0,31V/0,173V
Output amplitude AC:..... 1,98V/0,97V/383mV/198mV
Impedance range:..... 200Ω - 10MΩ
Temperature range:..... -30 .. +80°C

1.6.21.1.4 Process Data Image

Organization of the user data communicated via brickBUS (emBRICK-Master and ComSens):

Out-Userdata **from** Master to Slave total: 18 Bytes			**In**-Userdata **to** Master from Slave total: 18 Bytes		
Byte	Function	rC Assign...	Byte	Function	rC Assign...
Page 0					
0	Page (here = 0x00) Sub-ID	... + eB_B0, 0, ...	0	Bit 0…3: Modul Status usage see below 0 = error 1 = in operation (no results) 2 = ready (no results) 3 = results (not all) 4 = results (all) Bit 4…7: Measurement mode (0=permanent, 1=average, 2= find resonance, …)	... + eB_B0, 0, ...
1…17	reserved		1	Result counter 0..255	... + eB_B1, 0, ...
			2	SubBrick ID 1	... + eB_B2, 0, ...
			3	SubBrick ID 2	... + eB_B3, 0, ...
			4…17	reserved	
Page 1					
0	Page (here = 0x01) Write settings	... + eB_B0, 0, ...	0	Bit 0…3: Modul Status usage see below 0 = error 1 = in operation (no results) 2 = ready (no results) 3 = results (not all) 4 = results (all) Bit 4…7: Measurement mode (0=permanent, 1=average, 2= find resonance, …)	... + eB_B0, 0, ...
1	Communic.Counter usage see below	... + eB_B1, 0, ...	1	Result counter 0..255	... + eB_B1, 0, ...
2, 3, 4	Start frequency [Hz]	... + eB_W1, 0, ... + eB_B4, 0, ...	2, 3	real, frequency 1	... + eB_W1, 0, ...
5, 6, 7	Frequency increment [Hz]	... + eB_B5, 0, ... + eB_W3, 0, ...	4, 5	imag, frequency 1	... + eB_W2, 0, ...
8, 9	Number of increments 1 ... 511	... + eB_W4, 0, ...	6, 7	real, frequency 2	... + eB_W3, 0, ...
10, 11	Settling time Bit 0… 8: Value Bit 9,10: 0 = Default (Value*1) 1= Value*2, 2 = Default (Value*1) 3 = Value*4	... + eB_W5, 0, ...	8, 9	imag, frequency 2	... + eB_W4, 0, ...
12	Bit 0…3: Measurement mode (0=permanent, 1=average, 2= find resonance, …) Bit 4…6: Clock divider Bit 7: system clock (1=external, 0=internal)	... + eB_B12, 0, ...	10, 11	real, frequency 3	... + eB_W5, 0, ...
13	Average depth	... + eB_B13, 0, ...	12, 13	imag, frequency 3	... + eB_W6, 0, ...
14	Bit 0…1: Amplitude Bit 2: PGA Bit 3: Switch 3 Bit 4: Switch 4	... + eB_B14, 0, ...	14, 15	Temperature Chip	... + eB_W7, 0, ...

	Bit 5: Reset				
15…17	reserved		16, 17	Temperature sensor	... + eB_W8, 0, ...
Page 2					
0	Page (here = 0x02) Read settings	... + eB_B0, 0, ...	0, 1	see Page 1	... + eB_W0, 0, ...
1…17	reserved		2, 3, 4	Start frequency [Hz]	... + eB_W1, 0, ... + eB_B4, 0, ...
			5, 6, 7	Frequency increment [Hz]	... + eB_B5, 0, ... + eB_W3, 0, ...
			8, 9	Number of increments	... + eB_W4, 0, ...
			10, 11	Settling time Bit 0… 8: Value Bit 9,10: 0 = Default (Value*1) 1= Value*2, 2 = Default (Value*1) 3 = Value*4	... + eB_W5, 0, ...
			12	Bit 4…6: Clock divider Bit 7: system clock (1=external, 0=internal)	... + eB_B12, 0, ...
			13	Average depth	... + eB_B13, 0, ...
			14	Bit 0…1: Amplitude Bit 2: PGA Bit 3: Switch 3 Bit 4: Switch 4	... + eB_B14, 0, ...
			15…17	reserved	
Page 3					
0	Page (here = 0x03) Read AD5933 Register	... + eB_B0, 0, ...	0, 1	see Page 1	... + eB_W0, 0, ...
1…17	reserved		2, 3	Control	... + eB_W1, 0, ...
			4, 5, 6	Start frequency	... + eB_W2, 0, ... + eB_B6, 0, ...
			7, 8, 9	Frequency increment	... + eB_B7, 0, ... + eB_W4, 0, ...
			10, 11	Number of increments	... + eB_W5, 0, ...
			12, 13	Number of settling time cycles	... + eB_W6, 0, ...
			14, 15	Temperature data	... + eB_W7, 0, ...
			16	Status	... + eB_B16, 0, ...
			17	reserved	

For details about the configurations, see in the datasheet from the AD5933.

1.6.21.2 CAM-2SB-PotTempTmp-0#

SubBrick-ID: ? (3 kOhm)

1.6.21.2.1 Brief Description

With the CAM-2SB-ImpTmp module can be measured impedance and temperature.

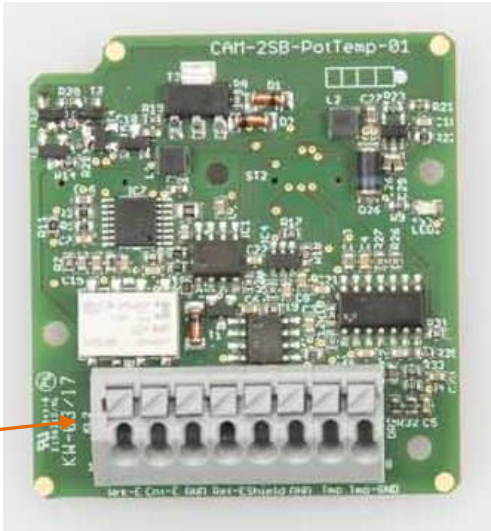

Terminals
1…8 (from left to right)

1.6.21.2.2 Terminal assingment

Ter.	Function	Usage
1	Arbeitselektronde	
2	Gegenelektrode	
3	GND	
4	Bezugselektrode	
5	Shield	
6	GND	
7	Temp-Sensor	
8	AGND	

Connection a typical Potentiostat sensor

Pin1 brown
Pin2 blue
Pin4 white
Pin5 Shield

1.6.21.3 CAM-SB-1Wire -0#

SubBrick-ID: 7 (15 kOhm)

1.6.21.3.1 Brief Description

With the 1Wire SubBrick it is possible to read up to 30 1Wire devices for example Temperature sensors.
At the moment the SubBrick is only able to read 2 Temperature sensors the DS18S20 and the DS18B20.

1.6.21.3.2 Terminal assingment

Ter.	Function	Usage
1	5V	Power Supply for the 1Wire devices
2	1Wire	Signal for the 1Wire devices
3	GND	Ground
4	24V	external 24V power connection
5	GND	Ground

1.6.21.3.3 LED Indications

5V LED ..... 5 V is Present
Tx LED..... the SB is transmitting to the ComSens Brick
Rx LED ..... the SB is receiving data from the ComSens Brick

1.6.21.3.4 Technical Data

Note: For further global specification refer to chapter 4

Output:
Power supply ..... 5V @ 200mA
Status indication ..... LEDs for the module status
1Wire Data signal ..... Communication signal at some devices combined with the powerline
Input:
Power supply ..... 24V @ 100mA just needed at an isolated ComSens Module

Mechanics:
Terminals ..... 1 x 2 and 1 x 3, cage clamp Wago250
Connection..... usable with one litz wire from 0.2 – 0.5 mm²
Dimensions ..... 21 x 36 x 15 mm
Weight ..... approx. 5g

1.6.21.3.5 Process Data Image

Out-Userdata **from** Master to Slave total: 3 Bytes			**In**-Userdata **to** Master from Slave total: 2 Bytes		
Byte	Function	rC Assign...	Byte	Function	rC Assign...
Page 1 Search					
0	Page (= 01h)	... + eB_B0, 0, ...	0	Status Bit 0...2 Status Bit 3...7 Number of 1Wire devices	... + eB_B0, 0, ...
1	Counter Out/ SB Select Bit 0...6 Counter Bit 7 SB Select	... + eB_B1, 0, ...	1	Counter In / SB Select Bit0...6 com counter Bit7 SubBrick seleced	... + eB_B1, 0, ...

2	Operation mode See below	... + eB_B2, 0, ...			

Page

Page 7	Page 6	Page 5	Page 4	Page 3	Page 2	Page 1	Page 0
Bit 7							Bit 0

Bit 7-0..... Page.<7:0>: Page
0000 0000 = use Page 0(0x00) reserved by ComSens
0000 0001 = use Page 1(0x01)
...
1111 1111 = use Page 254(0xFF)

Counter Out/ SB Select

Count 7	Count 6	Count 5	Count 4	Count 3	Count 2	Count 1	Count 0
Bit 7							Bit 0

Bit 7 ..... SB<7>: Select SubBrick for Communication
0 = Left SB
1 = Right SB
Bit 6-0..... Count<6:0>: Synconisation Counter.
000 0000 = 0
...
111 1111 = 127

Operation Mode

Mode 7		Mode 6	Mode 5	Mode 4	Mode 3	Mode 2	Mode 1	Mode
Bit 7								Bit 0

Bit 7-0..... Mode<7:0>: Operation mode
0000 0000 = 0 = Off / Reset
0000 0001 = 1 = Initialization
0000 0010 = 2 = (Normal) Operation **Type 1**
..... 0000 0011 = 3 = Operation **Type 2 (futher)**

Status

Mode 4	Mem 3	Mem 2	Mem 1	Mem 0	State 2	State 1	State 0
Bit 7							Bit 0

Bit 7-4..... Mem<7:4>: detected 1Wire devices on the SB
0 0000 = 0 no 1Wire devices detected
...
1 1110 = 30 1Wire devices detected
Bit 3-0..... State<3:0>: Communication Status
0000 = 0 Off
0001 = 1 Initialization
0010 = 2 Initialization OK
0011 = 3 Running OK
0100 = 4 Timeout error

Counter In/ SB Select

Count 7	Count 6	Count 5	Count 4	Count 3	Count 2	Count 1	Count 0
Bit 7							Bit 0

Bit 7 ..... SB<7>: Select SubBrick for Communication
0 = Left SB
1 = Right SB
Bit 6-0 ..... Count<6:0>: Synconisation Counter.
000 0000 = 0
...
111 1111 = 127

Out-Userdata **from** Master to Slave total: 3 Bytes			**In**-Userdata **to** Master from Slave total: 14 Bytes		
Byte	Function	rC Assign...	Byte	Function	rC Assign...
Page 2 Read 1Wire					
0	Page (= 02h)	... + eB_B0, 0, ...	0	Status Bit 0...2 Status Bit 3...7 Number of 1Wire devices	... + eB_B0, 0, ...
1	Counter Out/ SB Select Bit 0...6 Counter Bit 7 SB Select	... + eB_B1, 0, ...	1	Counter In / SB Select Bit0...6 com counter Bit7 SubBrick select	... + eB_B1, 0, ...
2	Page Out	... + eB_B2, 0, ...	2	Page In	... + eB_B2, 0, ...
			3	Reserved	... + eB_B3, 0, ...
			4,8,6,7, 8,9,10, 11	1WireX ID	... + eB_W2, 0, ... + eB_W5, 0, ...
			12,13	1WireX Data	... + eB_W6, 0, ...
			14	Status Sensor	... + eB_B14, 0, ...
			15	Continued Interruption	... + eB_B15, 0, ...
			16	Error counter	... + eB_B16, 0, ...

Page

Page 7	Page 6	Page 5	Page 4	Page 3	Page 2	Page 1	Page 0
Bit 7							Bit 0

Bit 7-0 ..... Page.<7:0>: Page
0000 0000 = use Page 0(0x00) reserved by ComSens
0000 0001 = use Page 1(0x01)
...
1111 1111 = use Page 254(0xFF)

Counter Out/ SB Select

Count 7	Count 6	Count 5	Count 4	Count 3	Count 2	Count 1	Count 0
Bit 7							Bit 0

Bit 7 ..... SB<7>: Select SubBrick for Communication
0 = Left SB
1 = Right SB
Bit 6-0 ..... Count<6:0>: Synconisation Counter.
000 0000 = 0
...
111 1111 = 127

Page In/Out

-	-	-	Page 4	Page 3	Page 2	Page 1	Page 0
Bit 7							Bit 0

Bit 4-0..... Page<4:0>: Every 1Wire Sensor found has its own page
0 0000 = 0
...
0 0010 = 31

1Wire ID

ID 63	ID 62	ID 61	ID ...	ID 3	ID 2	ID 1	ID 0
Bit 63			...				Bit 0

Bit 63-0..... ID <63:0>: Unique 1Wired Device ID
0x0000000000000000
...
0xFFFFFFFFFFFFFFFF

1Wire Data

Data 15	Data 14	Data 13	Data 12	Data 11	Data 10	Data 9	Data 8
Bit 15							Bit 8
Data 7	Data 6	Data 5	Data 4	Data 3	Data 2	Data 1	Data 0
Bit 7							Bit 0

Bit 15-0..... Data<15:0>: Data from 1Wire
0x0000
...
0xFFFF

Status Slave

-	-	-	-	Status 3	Status 2	Status 1	Status 0
Bit 7							Bit 0

Bit 3-0..... State<3:0>: Communication Status
0000 = 0 Off
0001 = 1 Initialization
0010 = 2 Initialization OK
0011 = 3 Running OK
0100 = 4 Sensor Lost
0101 = 5 Communication Error
0110 = 6 Error

Continued Interruption

INT 7	INT 6	INT 5	INT 4	INT 3	INT 2	INT 1	INT 0

Bit 7-0..... INT<7:0>: How many continued Interruptions happend
0000 1011 = 11
...
0000 0000 = 0

Error Counter

ERR 7	ERR 6	ERR 5	ERR 4	ERR 3	ERR 2	ERR 1	ERR 0

Bit 7-0..... ERR<7:0>: Count up by 3 for every wrong message, count down by 1 for every correct message
00110101 = 53
...
0000 0000 = 0

1Wire ID

ID 63	ID 62	ID 61	ID ...	ID 3	ID 2	ID 1	ID 0

Out-Userdata **from** Master to Slave total: 2 Bytes			**In**-Userdata **to** Master from Slave total: 22 Bytes		
Byte	Function	rC Assign...	Byte	Function	rC Assign...
Page 0x10 Read 1Wire					
0	Page (= 10h)	... + eB_B0, 0, ...	0	Status Bit 0...2 Status Bit 3...7 Number of 1Wire devices	... + eB_B0, 0, ...
1	Counter Out/ SB Select Bit 0...6 Counter Bit 7 SB Select	... + eB_B1, 0, ...	1	Counter In / SB Select Bit0...6 com counter Bit7 SubBrick select	... + eB_B1, 0, ...
			2, 3	1Wire 0 Data	... + eB_W1, 0, ...
			4, 5	1Wire 1 Data	... + eB_W2, 0, ...
			6, 7	1Wire 2 Data	... + eB_W3, 0, ...
			8, 9	1Wire 3 Data	... + eB_W4, 0, ...
			10, 11	1Wire 4 Data	... + eB_W5, 0, ...
			12, 13	1Wire 5 Data	... + eB_W6, 0, ...
			14, 15	1Wire 6 Data	... + eB_W7, 0, ...
			16, 17	1Wire 7 Data	... + eB_W8, 0, ...
			18, 19	1Wire 8 Data	... + eB_W9, 0, ...
			20, 21	1Wire 9 Data	... + eB_W10, 0, ...

1Wire X Data

Data 15	Data 14	Data 13	Data 12	Data 11	Data 10	Data 9	Data 8
Bit 15							Bit 8
Data 7	Data 6	Data 5	Data 4	Data 3	Data 2	Data 1	Data 0
Bit 7							Bit 0

Bit 15-0 ..... Data<15:0>: Data from 1Wire
0x0000
...
0xFFFF

Out-Userdata **from** Master to Slave total: 2 Bytes			**In**-Userdata **to** Master from Slave total: 22 Bytes		
Byte	Function	rC Assign...	Byte	Function	rC Assign...
Page 0x11 Read 1Wire					
0	Page (= 11h)	... + eB_B0, 0, ...	0	Status Bit 0...2 Status Bit 3...7 Number of 1Wire devices	... + eB_B0, 0, ...
1	Counter Out/ SB Select Bit 0...6 Counter Bit 7 SB Select	... + eB_B1, 0, ...	1	Counter In / SB Select Bit0...6 com counter Bit7 SubBrick select	... + eB_B1, 0, ...
			2, 3	1Wire 10 Data	... + eB_W1, 0, ...
			4, 5	1Wire 11 Data	... + eB_W2, 0, ...
			6, 7	1Wire 12 Data	... + eB_W3, 0, ...
			8, 9	1Wire 13 Data	... + eB_W4, 0, ...
			10, 11	1Wire 14 Data	... + eB_W5, 0, ...

			12, 13	1Wire 15 Data	... + eB_W6, 0, ...
			14, 15	1Wire 16 Data	... + eB_W7, 0, ...
			16, 17	1Wire 17 Data	... + eB_W8, 0, ...
			18, 19	1Wire 18 Data	... + eB_W9, 0, ...
			20, 21	1Wire 19 Data	... + eB_W10, 0, ...

Out-Userdata **from** Master to Slave total: 2 Bytes			**In**-Userdata **to** Master from Slave total: 22 Bytes		
Byte	Function	rC Assign...	Byte	Function	rC Assign...
Page 0x12 Read 1Wire					
0	Page (= 12h)	... + eB_B0, 0, ...	0	Status Bit 0...2 Status Bit 3...7 Number of 1Wire devices	... + eB_B0, 0, ...
1	Counter Out/ SB Select Bit 0...6 Counter Bit 7 SubBrick select	... + eB_B1, 0, ...	1	Counter In / SB Select Bit0...6 com counter Bit7 SubBrick select	... + eB_B1, 0, ...
			2, 3	1Wire 20 Data	... + eB_W1, 0, ...
			4, 5	1Wire 21 Data	... + eB_W2, 0, ...
			6, 7	1Wire 22 Data	... + eB_W3, 0, ...
			8, 9	1Wire 23 Data	... + eB_W4, 0, ...
			10, 11	1Wire 24 Data	... + eB_W5, 0, ...
			12, 13	1Wire 25 Data	... + eB_W6, 0, ...
			14, 15	1Wire 26 Data	... + eB_W7, 0, ...
			16, 17	1Wire 27 Data	... + eB_W8, 0, ...
			18, 19	1Wire 28 Data	... + eB_W9, 0, ...
			20, 21	1Wire 29 Data	... + eB_W10, 0, ...

Example:

Read from the SubBrick:
Read the SubBrick ID at Page 0x00

Send to the ComSens Brick
1. Communication Initialization

Page = 0x01
Counter Out = Counter In +1
Modus = 0x01

2. Communication start reading data from the sensors

Page =0x01
Counter Out = Counter In +1
Modus = 0x02

3. Communication show the address and the data on the master

Page =0x02
Counter Out = Counter In +1
Page = 0x01

1.6.21.3.6 Programing Note

In addition to the notes in chapter 4, please regard the following:

- The SuBricks 1 and 2 on the ComSens Module are independent from each other. And the individuals Page will only change if addressed. To address the different SubBricks set the corresponding SB-Select bit.

- If a Timeout error occurs the SubBrick will stop read data from the 1Wire sensors and wait for a new initialization

- Each 1Wire device got a unique 64-Bit ID. It is possible to read each individual ID and the corresponding data or just read the data from the sensors. The order in which the data appear in the data view corresponds to the to the Page Number the ID is shown.

- If the Continued Interruption counter reached 10 at any sensor, the module state change to 4 (Sensor Lost)

- If the Error Counter reaches 50 at any sensor the module state change to 5 (Communication Error)

About the Sensors:

- DS18S20
  https://datasheets.maximintegrated.com/en/ds/DS18S20.pdf
- DS18B20
  https://datasheets.maximintegrated.com/en/ds/DS18B20.pdf

1.6.21.4 CAM-SB-RS232-0#

SubBrick-ID: 3 (5,1 kOhm)

- ### CAM-SB-RS485-0#

SubBrick-ID: 4 (7,3 kOhm)

1.6.21.4.1 Brief Description

With this SubBrick the ComSens provides a serial connection with different selectable protocols.

1.6.21.4.2 Terminal assignment

Ter.	Function	Usage
1	A	Signal A
2	B	Signal B
3	GND	Ground

1.6.21.4.3 Technical Data

Note: For further global specification refer to chapter **4**

Output:
Power supply ..... 5V @ 200mA
Status indication ..... LEDs for the module status
1Wire Data signal ..... Communication signal at some devices combined with the powerline

Input:
Power supply ..... 24V @ 100mA just needed at an isolated ComSens Module

Mechanics:
Terminals ..... 1 x 2 and 1 x 3, cage clamp Wago250
Connection..... usable with one litz wire from 0.2 – 0.5 mm²
Dimensions ..... 21 x 36 x 15 mm
Weight ..... approx. 5g

1.6.21.4.4 Process Data Image

See Software Operation Modes

1.6.21.4.5 Programing Note

See Software Operation Modes

1.6.21.5 CAM-SB-D0-Opto -0# (Planned/In Development)

SubBrick-ID: 9 (20 kOhm)

1.6.21.5.1 Brief Description

With this SubBrick is it possible to read values from smart meters

1.6.21.5.2 Terminal assignment

Ter.	Function	Usage
1	GND	Ground
2	RX	Receive
3	TX	Transmit
4	3V3	Power Supply for opto-reader

1.6.21.5.3 Technical Data

Note: For further global specification refer to chapter 4

Output:
Power supply 3.3V
Input:
Power supply 24V

Mechanics:
Terminals ..... 1 x 4, cage clamp Wago250
Connection..... usable with one litz wire from 0.2 – 0.5 mm²
Dimensions ..... 21 x 36 x 15 mm
Weight ..... approx. 5g

1.6.21.5.4 Process Data Image

See Software Operation Modes

1.6.21.5.5 Programing Note

See Software Operation Modes

1.6.21.6 CAM-SB-5RS232Multi-0# (Planned/In Development)

1.6.21.6.1 Brief Description

With this SubBrick is it possible to read several RS232 devices

1.6.21.6.2 Terminal assignment

1.6.21.6.3 Technical Data

1.6.21.6.4 Process Data Image

See Software Operation Modes

1.6.21.6.5 Programming Note

See Software Operation Modes

1.6.21.1 CAM-2SB-AI-0# (Planned/In Development)

1.6.21.1.1 Brief Description

With this SubBrick is it possible to read in analog signals.

1.6.21.1.2 Terminal assignment

1.6.21.1.3 Technical Data

1.6.21.1.4 Process Data Image

See Software Operation Modes

1.6.21.1.5 Programming Note

See Software Operation Modes

1.6.21.2 CAM-SB-SPI-0# (Planned/In Development)

1.6.21.2.1 Brief Description

With this SubBrick is it possible to communicate with SPI Sensors

1.6.21.2.2 Terminal assignment

1.6.21.2.3 Technical Data

1.6.21.2.4 Process Data Image

See Software Operation Modes

1.6.21.2.5 Programming Note

See Software Operation Modes

1.6.21.3 CAM-SB-I2C-0# (Planned/In Development)

1.6.21.3.1 Brief Description

With this SubBrick is it possible to communicate with I2C Sensors

1.6.21.3.2 Terminal assignment

1.6.21.3.3 Technical Data

1.6.21.3.4 Process Data Image

See Software Operation Modes

1.6.21.3.5 Programming Note

See Software Operation Modes

1.6.22 G-2Ai2Ao-0#-RB

2x Analog Input, 20mA/10V, software selectable

2x Analog Output, 20mA/10V

Modul ID	**2-490, 2-491**		
Order No.	**G-2Ai2Ao-0#-RB**		
Terminals	**Cage clamp**	Core	**M24I**
Size	**36 x 90mm**	BB_{FCP}	**2-1-1**
Variants 0# =	**01:** 0/4..20mA (2-490) **02:** 0…10V (2-491) (others on request)		

1.6.22.1 Brief Description

The module includes two analog inputs (current/voltage) and two analog outputs (current/voltage). All inputs can be software selected to either measure current or voltage. Each output can only drive a voltage or current (fixed, see variants). There are three terminals (power, input, ground) available for each input. This simplifies power supply distribution to the sensors. Therefore, a direct connection of the sensors without separate clamps is available. The 24V supply for the inputs are protected by a 0,2A poly fuse.

1.6.22.2 Connectors and Indication-/Operation-Elements

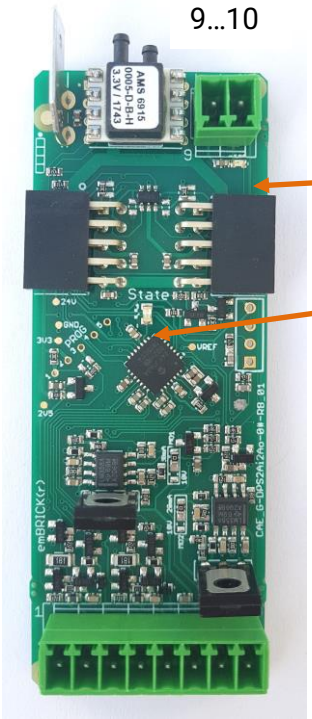

1.6.22.3 Terminal Assignment

Circuit Example	Ident.	Ter.	Function	Usage	internal simplified diagram
	(lower terminal row)				
	24V	**1**	Analog Input 1	24V supply	
	I1	**2**		Input	
	GND	**3**		Ground	
	24V	**4**	Analog Input 2	24V supply	
	I2	**5**		Input	
	GND	**6**		Ground	
	O1	**7**	Analog Output 1	Output	
	GND	**8**	Ground	Ground	
	(upper terminal row)				
	O2	**9**	Analog Output 2	Output	
	GND	**10**	Ground	Ground	

- **LED Indications**

Output 1…2 ..... status indication of the *Output O1...2*
Status LED ..... module status (see **Fehler! Verweisquelle konnte nicht gefunden werden.**)

1.6.22.4 Technical Data

Inputs:

Number of inputs 2
Connection technology ..... 2/3-wire (supports sensor power supply)
for current input:
Input range ..... nom. 0...20mA (full ADC approx. 0...23.3mA, max. 30mA)
Input resistance ..... approx. 200 Ohm
for voltage input:
Input range ..... nom. 0...10V (full ADC approx. 0...10,5V, max. 15)
Input resistance ..... approx. 85kOhm
Resolution ..... 10 Bit, 0.1%
Linearity..... 0.2%
Accuracy ..... 0.5%[1]
Filter..... hardware, 1st order, $f_{cut\ off}$ = approx. 100Hz
Type..... p-switching
Threshold low/high ..... approx. 5.1 / 5.6V
Input resistance ..... approx. 85kOhm
Threshold low/high ..... approx. 1.2 / 1.3V

Outputs:

Number of outputs 2
For current input:
Range, nominal ..... 0/4 to 20mA
Maximum current ..... approx. 21mA
Maximum voltage..... > 12V (load < 600 Ω) @24V internal supply
Filter..... hardware, 1st order, $f_{cut\ off}$ = approx. 0.7Hz
For Voltage Input:
Range, nominal ..... 0 to 10V
Maximum voltage..... approx. 10.5V
Maximum current ..... > 20mA (load > 500 Ω)

[1] After calibration

Filter..... hardware, 1st order, $f_{cut\ off}$ = approx. 0.7Hz

Others:
Bus power consumption..... sensor supply + analog output + 5mA@24V, <30mA@3.3V
Isolation buses to I/O..... none (important details: consider to chapter **4**)
Status indication ..... LEDs for each input, output and for the module status

Mechanics:
Terminals ..... cage clamp i.e. PTR STL1550/…-3.5 with 3.5mm pin spacing
Connection..... usable with solid/stranded wire from 0.14 – 1.5 mm²
Dimensions ..... 36 x 90 x 20 mm
Weight ..... approx. 20g
Plug-in terminals ..... optional available

1.6.22.5 Process Data Image

Options:

Out-Userdata **from** Master to Slave Total: 5 Bytes			**In**-Userdata **to** Master from Slave Total: 13 Bytes		
Byte	Function	rC Assign...	Byte	Function	rC Assign...
0, 1	Analog-Output 1 0...15060 Dig. ≡ 0...20.0 mA or 0...15060 Dig. ≡ 0...10.0 V	... + eB_W0, 0, ...	0, 1	Not used	Not used
2, 3	Analog-Output 2 0...15060 Dig. ≡ 0...20.0 mA or 0...15060 Dig. ≡ 0...10.0 V	... + eB_W1, 0, ...	2, 3	Analog Input Tempera-ture**Fehler! Textmarke nicht definiert.**	... + eB_W1, 0, ...
4	Input Mode Control AICFG1 AICFG2	... + eB_B4, 0, 0, ... + eB_B4, 0, 1, ...	4, 5	Analog Input Voltage 1	... + eB_W2, 0, ...
			6, 7	Analog Input Current 1	... + eB_W3, 0, ...
			8, 9	Analog Input Voltage 2	... + eB_W4, 0, ...
			10, 11	Analog Input Current 2	... + eB_W5, 0, ...
			12	Input Image Digital status of analog inputs	... + eB_B12, 0, ... + eB_B12, 1, ...

Analog Output 1/2

-	-	AOV13	AOV12	AOV11	AOV10	AOV9	AOV8
Bit 15							Bit 8

AOV7	AOV6	AOV5	AOV4	AOV3	AOV2	AOV1	AOV0
Bit 7							Bit 0

Bit 13-0 ..... AOV<9:0>: Analog Output Value (Little Endian)
0011101011010011 = 15059 (output 20mA/10V)
0001110101101010 = 7530 (output 10mA)
...
00 0000 0000 0000 = 0 (output 0mA)

Input Mode Control

-	-	-	-	-	-	AICFG2	AICFG1
Bit 7							Bit 0

Bit 0 ..... AICFG1: Current measurement for AI1
1 = Current measurement shunt is active
0 = Current measurement shunt is inactive

Bit 1 ..... AICFG2: Current Measurement for AI2
1 = Current measurement shunt is active
0 = Current measurement shunt is inactive

Analog Input Pressure Fehler! Textmarke nicht definiert.

-	-	AIP13	AIP12	AIP11	AIP10	AIP9	AIP8
Bit 15							Bit 8

AIP7	AIP6	AIP5	AIP4	AIP3	AIP2	AIP1	AIP0
Bit 7							Bit 0

Bit 13-0 ..... AIP<13:0>: Analog Input Value (Little Endian)
11 1111 1111 = Analog Input Value: 16383
10 0000 0000 0000 = 8192 (0 mbar)
...
00 0000 0000 0000 = Analog Input Value: 0

Analog Input Temperature Fehler! Textmarke nicht definiert.

-	-	-	-	-	AIT10	AIT9	AIT8
Bit 15							Bit 8

AIT7	AIT6	AIT5	AIT4	AIT3	AIT2	AIT1	AIT0
Bit 7							Bit 0

Bit 10-0 ..... AIT<10:0>: Analog Input Value (Little Endian)
111 1111 1111 = Analog Input Value: 2047
011 0000 0000 = 768 (25°C)
…
000 0000 0000 = Analog Input Value: 0

Analog Voltage 1/2 and Analog Current 1/2

-	-	-	-	-	-	AIV9	AIV8
Bit 15							Bit 8

AIV7	AIV6	AIV5	AIV4	AIV3	AIV2	AIV1	AIV0
Bit 7							Bit 0

Bit 9-0 ..... AIV<9:0>: Analog Input Value (Little Endian)
11 1111 1111 = Analog Input Value: 1023
01110101000 = 936 (for currents 20mA)
…
00 0000 0000 = Analog Input Value: 0

Input Image

-	-	SAIC2	SAIV2	SAVC1	SAIV1	SAI2	SAI1
Bit 7							Bit 0

Bit 0 ..... SAI1: digital Status of Analog Input 1 (Reserved)
1 = Corresponding Input is HIGH
0 = Corresponding Input is LOW
Bit 1 ..... SAI2: digital Status of Analog Input 2 (Reserved)
1 = Corresponding Input is HIGH
0 = Corresponding Input is LOW
Bit 2 ..... SAIV1: digital Status of Analog Input Voltage 1
1 = Corresponding Input is HIGH
0 = Corresponding Input is LOW
Bit 3 ..... SAIV1: digital Status of Analog Input Current 1
1 = Corresponding Input is HIGH
0 = Corresponding Input is LOW
Bit 4 ..... SAIV1: digital Status of Analog Input Voltage 2
1 = Corresponding Input is HIGH
0 = Corresponding Input is LOW
Bit 5 ..... SAIV1: digital Status of Analog Input Current 2
1 = Corresponding Input is HIGH
0 = Corresponding Input is LOW

1.6.23 G-2Ai2AoPDS-0#-RB

2x Analog Input, 20mA/10V, software selectable
1x Analog Output, 10V
1x Analog Output, 20mA
1x Differential Pressure Sensor

Modul ID	**2-495**		
Order No.	**G-2Ai2AoPDS-0#-RB**		
Terminals	**Cage clamp**	Core	**M24I**
Size	**36 x 90mm**	BB_{FCP}	**2-1-1**
Variants 0# =	**01:** ±5mbar (others on request)		

1.6.23.1 Brief Description

The module includes two analog inputs (current/voltage), one current and one voltage output. All inputs can be software selected to either measure current or voltage. There are three terminals (power, input, ground) available for each input. This simplifies power supply distribution to the sensors. Therefore, a direct connection of the sensors without separate clamps is available. The 24V supply for the inputs are protected by a 0,2A poly fuse.

This module use the same terminals like the G-2Ai2Ao-0#-RB. For more details see it's description.

1.6.23.2 Process Data Image

Options:

Out-Userdata **from** Master to Slave Total: 5 Bytes			**In**-Userdata **to** Master from Slave Total: 13 Bytes		
Byte	Function	rC Assign...	Byte	Function	rC Assign...
0, 1	Analog-Output 1 0...15060 Dig. ≡ 0...20.0 mA or 0...15060 Dig. ≡ 0...10.0 V	... + eB_W0, 0, ...	0, 1	Analog Input Pressure[2]	... + eB_W0, 0, ...
2, 3	Analog-Output 2 0...15060 Dig. ≡ 0...20.0 mA or 0...15060 Dig. ≡ 0...10.0 V	... + eB_W1, 0, ...	2, 3	Analog Input Tempera-ture**Fehler! Textmarke nicht definiert.**	... + eB_W1, 0, ...
4	Input Mode Control AICFG1 AICFG2	 ... + eB_B4, 0, 0, ... + eB_B4, 0, 1, ...	4, 5	Analog Input Voltage 1	... + eB_W2, 0, ...
			6, 7	Analog Input Current 1	... + eB_W3, 0, ...
			8, 9	Analog Input Voltage 2	... + eB_W4, 0, ...
			10, 11	Analog Input Current 2	... + eB_W5, 0, ...
			12	Input Image Digital status of analog inputs	 ... + eB_B12, 0, ... + eB_B12, 1, ...

Analog Output 1/2

-	-	AOV13	AOV12	AOV11	AOV10	AOV9	AOV8
Bit 15							Bit 8

AOV7	AOV6	AOV5	AOV4	AOV3	AOV2	AOV1	AOV0
Bit 7							Bit 0

[2] Product variants 04, 05, 06 only

Bit 13-0 ..... AOV<9:0>: Analog Output Value (Little Endian)
0011101011010011 = 15059 (output 20mA/10V)
0001110101101010 = 7530 (output 10mA)
…
00 0000 0000 0000 = 0 (output 0mA)

Input Mode Control

-	-	-	-	-	-	AICFG2	AICFG1
Bit 7							Bit 0

Bit 0 ..... AICFG1: Current measurement for AI1
1 = Current measurement shunt is active
0 = Current measurement shunt is inactive
Bit 1 ..... AICFG2: Current Measurement for AI2
1 = Current measurement shunt is active
0 = Current measurement shunt is inactive

Analog Input Pressure Fehler! Textmarke nicht definiert.

-	-	AIP13	AIP12	AIP11	AIP10	AIP9	AIP8
Bit 15							Bit 8

AIP7	AIP6	AIP5	AIP4	AIP3	AIP2	AIP1	AIP0
Bit 7							Bit 0

Bit 13-0 ..... AIP<13:0>: Analog Input Value (Little Endian)
11 1111 1111 = Analog Input Value: 16383
10 0000 0000 0000 = 8192 (0 mbar)
…
00 0000 0000 0000 = Analog Input Value: 0

Analog Input Temperature Fehler! Textmarke nicht definiert.

-	-	-	-	-	AIT10	AIT9	AIT8
Bit 15							Bit 8

AIT7	AIT6	AIT5	AIT4	AIT3	AIT2	AIT1	AIT0
Bit 7							Bit 0

Bit 10-0 ..... AIT<10:0>: Analog Input Value (Little Endian)
111 1111 1111 = Analog Input Value: 2047
011 0000 0000 = 768 (25°C)
…
000 0000 0000 = Analog Input Value: 0

Analog Voltage 1/2 and Analog Current 1/2

-	-	-	-	-	-	AIV9	AIV8
Bit 15							Bit 8

AIV7	AIV6	AIV5	AIV4	AIV3	AIV2	AIV1	AIV0
Bit 7							Bit 0

Bit 9-0 ..... AIV<9:0>: Analog Input Value (Little Endian)
11 1111 1111 = Analog Input Value: 1023
01110101000 = 936 (for currents 20mA)

…
00 0000 0000 = Analog Input Value: 0

Input Image

-	-	SAIC2	SAIV2	SAVC1	SAIV1	SAI2	SAI1
Bit 7							Bit 0

Bit 0 ..... SAI1: digital Status of Analog Input 1 (Reserved)
1 = Corresponding Input is HIGH
0 = Corresponding Input is LOW
Bit 1 ..... SAI2: digital Status of Analog Input 2 (Reserved)
1 = Corresponding Input is HIGH
0 = Corresponding Input is LOW
Bit 2 ..... SAIV1: digital Status of Analog Input Voltage 1
1 = Corresponding Input is HIGH
0 = Corresponding Input is LOW
Bit 3 ..... SAIV1: digital Status of Analog Input Current 1
1 = Corresponding Input is HIGH
0 = Corresponding Input is LOW
Bit 4 ..... SAIV1: digital Status of Analog Input Voltage 2
1 = Corresponding Input is HIGH
0 = Corresponding Input is LOW
Bit 5 ..... SAIV1: digital Status of Analog Input Current 2
1 = Corresponding Input is HIGH
0 = Corresponding Input is LOW

5.2 CAE S Bricks (Safety)

Modules for secure applications according to SILx.

+++ planned +++

r

5.3 CAE B Bricks (Building Automation)

Modules for Building Automation

5.3.1 **B-8Temp-0#**

8x Temperature, KTY, 2-wire

Modul ID	**4-401, 4-402**			
Order No.	**CAE_B-8Temp-0# (-p)**			
Terminals	**push-in** (for ≤ 0.5mm²)	Core	**M16E**	
Size	**4 eU** (44mm x 72mm)	BB_{FCP}	**1-1-1**	
Variantes (0# =)	**01:** KTY2k, -30..80°C (4-401) **02:** KTY2k, -5..45°C (4-402) (othes on request)			

5.3.1.1 Brief Description

This module includes eight inputs for a temperature sensor with different ranges.

It is typically used with a KTY with 2kOhm at 25°C. The module is equipped with enough clamps for the second connector of the sensor.

5.3.1.2 Connectors and Indication-/Operation-Elements

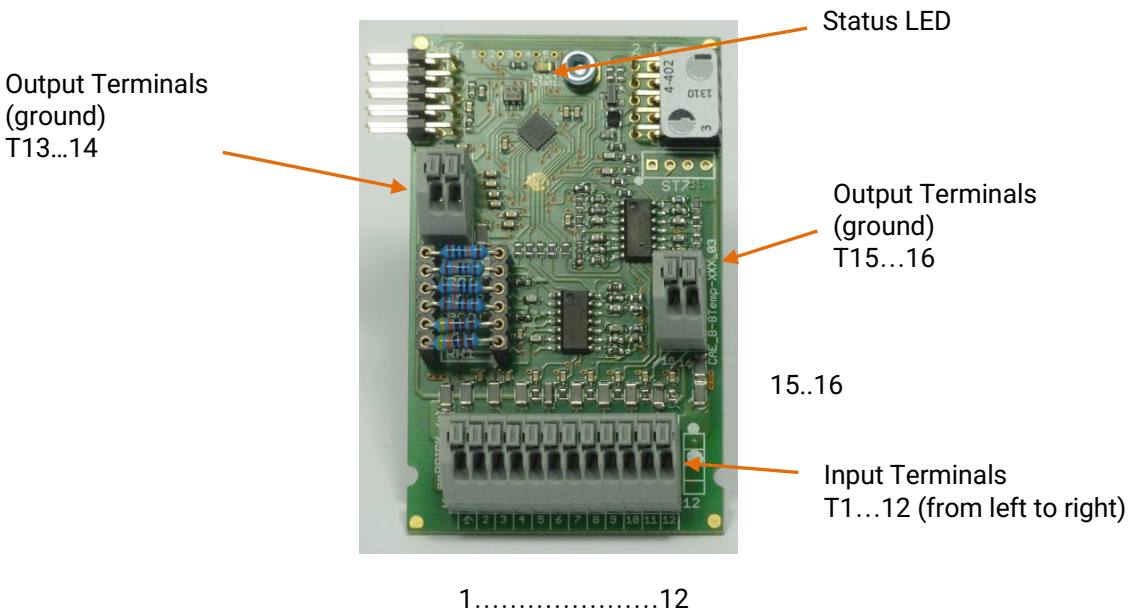

5.3.1.3 Terminal Assignment

Circuit Example	Ident.	Ter.	Function	Usage	internal simplified diagram
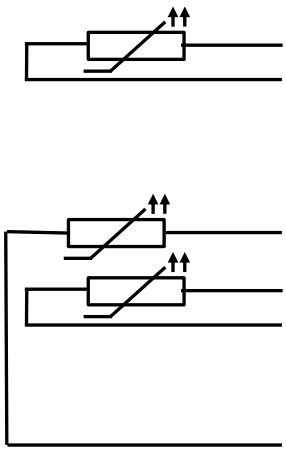	0V	**1**	Ground	GND	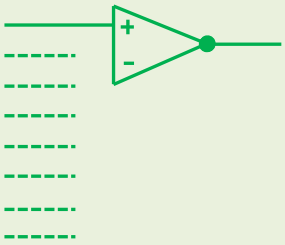
	0V	**2**			
	T1	**3**	Temp.- Input 1	Input	
	T2	**4**	Temp.- Input 2	Input	
	T3	**5**	Temp.- Input 3	Input	
	T4	**6**	Temp.- Input 4	Input	
	T5	**7**	Temp.- Input 5	Input	
	T6	**8**	Temp.- Input 6	Input	
	T7	**9**	Temp.- Input 7	Input	
	T8	**10**	Temp.- Input 8	Input	
	0V	**11**	Ground	GND	
	0V	**12**			
	0V	**13**	Ground	GND	
	0V	**14**			
	0V	**15**	Ground	GND	
	0V	**16**			

5.3.1.4 LED Indications

Status-LED ..... module status (see **Fehler! Verweisquelle konnte nicht gefunden werden.**)

5.3.1.5 Application Note

In addition to the notes in chapter **4**, please regard the following:

- The shield of the sensor should be connected to PE

5.3.1.6 Technical Data

Number of temperature sensor inputs: 8
Connection technology 2-wire
for 4-401*:*
Type KTY81-2k
Input range ..... nom. -30...80°C (full ADC approx. - 40...105°C)
Measure current ..... approx. 0.6mA
for 4-402*:*
Type KTY81-2k
Input range ..... nom. -5...45°C (full ADC approx. - 15...55°C)
Measure current ..... approx. 0.6mA
Resolution ..... 10 Bit, 0.1% (related on measure range)
Linearity..... 0.2% (related on measure range)
Accuracy ..... 0.5% (related on measure range)
Filter..... hardware, 1st order, $f_{cut\ off}$ = approx. 100Hz

Others:
Bus power consumption..... sensor supply@24V, <10mA@3.3V
Isolation buses to I/O..... none (important details: consider to chapter 4)
Status indication ..... LEDs for each digital input, output and for the module status

Mechanics:
Terminals (shield bridge)..... 2, cage clamp Wago250
Connection (shield bridge) ..... usable with one litz wire from 0.2 – 1.5 mm²
Terminals (others)..... 2x12, cage clamp Wago250
Connection (others) ..... usable with one litz wire from 0.2 – 0.5 mm²
Dimensions ..... 44 x 72 x 20 mm
Weight ..... approx. 30g

Options:
Plug-in terminals ..... optional available

5.3.1.7 Process Data Image

Out-Userdata **from** Master to Slave total: 0 Bytes			**In**-Userdata **to** Master from Slave total: 16 Bytes		
Byte	Function	rC Assign...	Byte	Function	rC Assign...
none			0, 1	Analog Input 1 73..952 Dig. = -30..80°C 69..979 Dig. = -10..50°C	... + eB_W0, 0, ...
			2, 3	Analog Input 2 73..952 Dig. = -30..80°C 69..979 Dig. = -10..50°C	... + eB_W1, 0, ...
			4, 5	Analog Input 3 73..952 Dig. = -30..80°C 69..979 Dig. = -10..50°C	... + eB_W2, 0, ...
			6, 7	Analog Input 4 73..952 105..845 Dig. = -30..80°C 69..979 Dig. = -10..50°C	... + eB_W3, 0, ...
			7, 8	Analog Input 5 73..952 Dig. = -30..80°C 69..979 Dig. = -10..50°C	... + eB_W4, 0, ...
			9, 10	Analog Input 6 73..952 Dig. = -30..80°C 69..979 Dig. = -10..50°C	... + eB_W5, 0, ...
			11, 12	Analog Input 7 73..952 Dig. = -30..80°C 69..979 Dig. = -10..50°C	... + eB_W6, 0, ...
			13, 14	Analog Input 8 73..952 Dig. = -30..80°C 69..979 Dig. = -10..50°C	... + eB_W7, 0, ...

Analog Input x

-	-	-	-	-	-	AIV9	AIV8
Bit 15							Bit 8

AIV7	AIV6	AIV5	AIV4	AIV3	AIV2	AIV1	AIV0
Bit 7							Bit 0

Bit 9-0 ..... AIV<9:0>: Analog Input Value (Little Endian)
11 1111 1111 = Analog Input Value: 1023
…
00 0000 0000 = Analog Input Value: 0

5.3.1.8 Programming Note

In addition to the notes in chapter 4, please regard the following:

- A calibration of the transmitted values has to be done in the application.
- For the CAE_B-8Temp-01 module you can use these values
  -30°C = 105 digit and 80°C = 845
- For the CAE_B-8Temp-02 module you can use these values
  -10°C = 79 digit and 50°C = 948

5.3.2 **B-6Moti2LDR-01**

6x Motion detection, 5V, 2/3-wire
2x LDR, LDR07, 2-wire

Modul ID	**4-411**		
Order No.	**CAE_B-6Moti2LDR-01 (-p)**		
Terminals	**cage clamp**	Core	**M16E**
Size	**4 eU** (44mm x 72mm)	BB_{FCP}	**1-1-1**
Variants 0# =	-		

5.3.2.1 Brief Description

The module includes six voltage inputs and two inputs for a LDR sensor.

For each input/sensor double terminals (ground, input) are available. An additional connected terminal field can by used for power supply distribution to the sensors. Therefore a direct connection of the sensors without separate clamps is available.

5.3.2.2 Connectors and Indication-/Operation-Elements

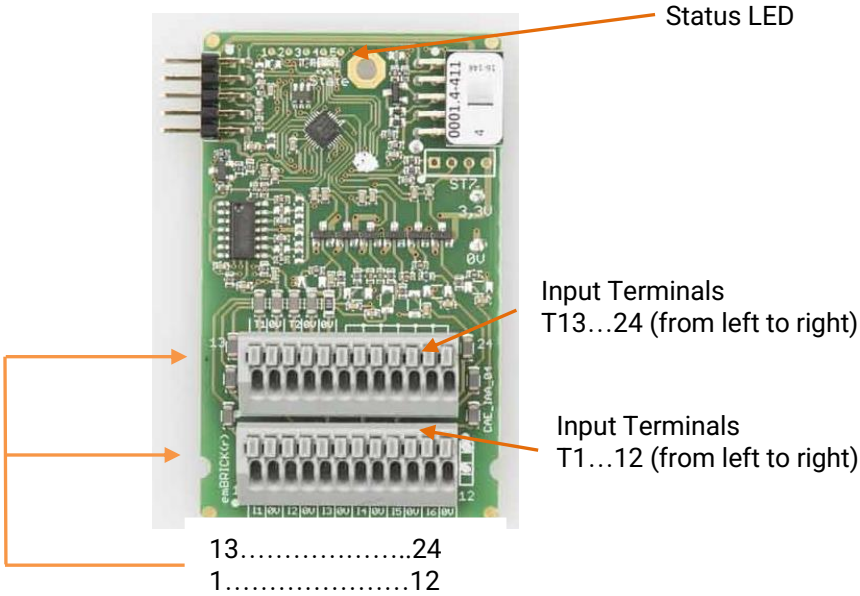

5.3.2.3 Terminal Assignment

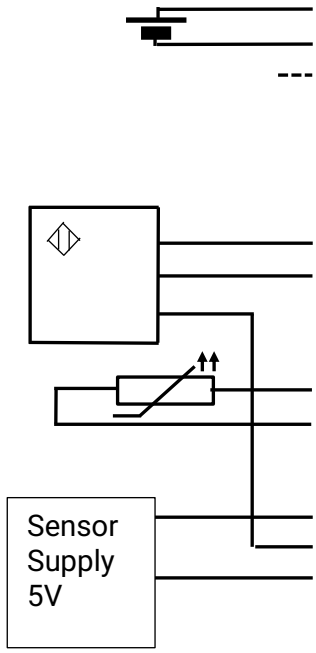

Ident.	Ter.	Function	Usage
I1	1	Analog - Input 1	Input
0V	2		GND
I2	3	Analog - Input 2	Input
0V	4		GND
I3	5	Analog - Input 3	Input
0V	6		GND
I4	7	Analog - Input 4	Input
0V	8		GND
I5	9	Analog - Input 5	Input
0V	10		GND
I6	11	Analog- Input 6	Input
0V	12		GND
T1	13	LDR - Input 1	Input
0V	14		GND
T2	15	LDR - Input 2	Input
0V	16		GND
0V	17		GND
	18	No funktion	
	19		
	20		
	21		
	22		
	23		
	24		

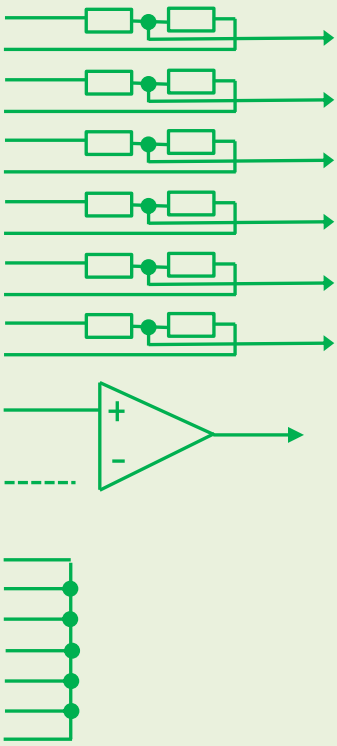

5.3.2.4 LED Indications

Status-LED ..... module status (see **Fehler! Verweisquelle konnte nicht gefunden werden.**)

5.3.2.5 Application Note

In addition to the notes in chapter **4**, please regard the following:

- The shield of the sensor should be connected to PE.
- The terminals 18 ... 24 are only to duplicate the supply e.g. for sensors. Do not exceed voltages over 35V and currents over 500mA.
- Make sure that the GND of the analog signals is connected to the 0V terminal. Otherwise the measurement will be less precise.

5.3.2.6 Technical Data

Note: For further global specification refer to chapter **4**.

Inputs:

Number of moti inputs..... 6
- Connection technology ..... 2/3-wire (supports sensor power supply)
- Type..... voltage
- Input range..... nom. 0...5V (full ADC approx. 0...7,3V , max. 15V)
- Input resistance..... approx. 50kOhm
- Resolution ..... 10 Bit, 0.1% (related on measure range)
- Linearity..... 0.2% (related on measure range)
- Accuracy ..... 0.5% (related on measure range)
- Filter..... hardware, 1st order, $f_{cut\ off}$ = approx. 100Hz

Number of LDR inputs..... 2
- Connection technology ..... 2-wire (supports shield)
- Type..... LDR07
- Measure current ..... approx. 0.6 mA
- Resolution ..... 10 Bit, 0.1% (related on measure range)
- Linearity..... 0.2% (related on measure range)
- Accuracy ..... 0.5% (related on measure range)
- Filter..... hardware, 1st order, $f_{cut\ off}$ = approx. 100Hz

Others:

Bus power consumption..... sensor supply@24V, <10mA@3.3V
Isolation buses to I/O..... none (important details: consider to chapter **4**)
Status indication ..... LEDs for each digital input, output and for the module status

Mechanics:

Terminals (others)..... 2x12, cage clamp Wago250
Connection (others) ..... usable with one litz wire from 0.2 – 0.5 mm²
Dimensions ..... 44 x 72 x 20 mm
Weight ..... approx. 30g

Options:

Plug-in terminals ..... optional available

5.3.2.7 Process Data Image

Organisation of the user data communicated via brickBUS:

Out-Userdata **from** Master to Slave total: 0 Bytes			**In**-Userdata **to** Master from Slave total: 16 Bytes		
Byte	Function	rC Assign...	Byte	Function	rC Assign...
	all not used		0,1	Analog Input 1 1..937 Dig. ≡ 0..5 V	... + eB_W0, 0, ...
			2, 3	Analog Input 2 1.. 937 Dig. ≡ 0..5 V	... + eB_W1, 0, ...
			4, 5	Analog Input 3 1.. 937 Dig. ≡ 0..5 V	... + eB_W2, 0, ...
			6, 7	Analog Input 4 1.. 937 Dig. ≡ 0..5 V	... + eB_W3, 0, ...
			8, 9	Analog Input 5 1.. 937 Dig. ≡ 0..5 V	... + eB_W4, 0, ...
			10, 11	Analog Input 6 1.. 937 Dig. ≡ 0..5 V	... + eB_W5, 0, ...
			12, 13	Analog Input 7	... + eB_W6, 0, ...
			14, 15	Analog Input 8	... + eB_W7, 0, ...

Analog Input x

-	-	-	-	-	-	AIV9	AIV8
Bit 15							Bit 8

AIV7	AIV6	AIV5	AIV4	AIV3	AIV2	AIV1	AIV0
Bit 7							Bit 0

Bit 9-0 ..... AIV<9:0>: Analog Input Value (Little Endian)
11 1111 1111 = Analog Input Value: 1023
…
00 0000 0000 = Analog Input Value: 0

5.3.2.8 Programming Note

In Addition to the notes in chapter **4**, please regard the following:

- A calibration has to be done in the applications software.
- A Conversion from °C into °F has to be done in the application software
- After every communication all inputs will be updated
- To stabilize the messurement results, they should be filtered in the application

5.3.3 **B-4Dim230T-01**

4x 230V-Dimmer, phase angle, lead/trail

Modul ID	**4-541**		
Order No.	**CAE_B-4Dim230T-01** (see below)		
Terminals	**push-in** (for ≤ 1.5mm²)	Core	**M24A**
Size	**8 eU** (88mm x 72mm)	BB_{FCP}	**1-1-1**
Variants 0# =	**01:** leading/trailing edge (4-541)		

5.3.3.1 Brief Description

This module contains four independent 230Vac dimmer outputs that includes a phase angle control with a resolution of 20.000 steps per half wave.

Leading and trailing edge phase control can be selected via the brickBUS (Do not change the mode under load).

Each of these channels can control a permanent load (see notes) of max. 300W and contains a quick acting 1,6A melting fuse for output protection.

5.3.3.2 Connectors and Indication-/Operation-Elements

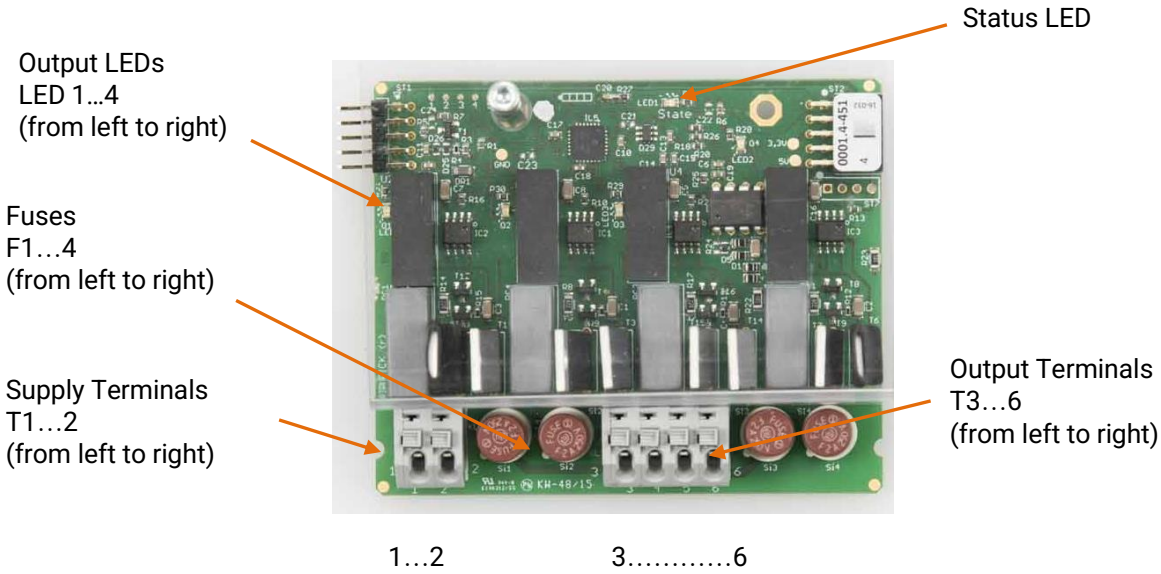

5.3.3.3 Terminal Assignment

Circuit Example	Ident.	Ter.	Function	Usage	internal simplified diagram
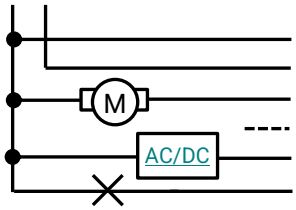	N	**1**	Supply Input AC	Null-Phase	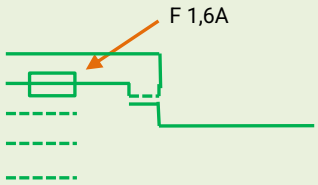
	L	**2**		Aktiv-Phase	
	LO1	**3**	Dimmer 1	Output	
	LO2	**4**	Dimmer 2	Output	
	LO3	**5**	Dimmer 3	Output	
	LO4	**6**	Dimmer 4	Output	

5.3.3.4 LED Indications

Output LED1..4 ..... status indication of the outputs
Status-LED ..... module status (see **Fehler! Verweisquelle konnte nicht gefunden werden.**)

5.3.3.5 Application Note

In addition to the notes in chapter 4, please regard the following:

- To save a secure usement each output is fused with quick reacting (F) 1.6A.
- The module does not contain any output inductors. For common use, this results in following **IMPORTANT** application requirements else a destruction of the module is very likely):
  a) for resistive loads use trailing edge mode. A separate inductor is NOT necessary.
  b) for capacitive loads use trailing edge mode. A separate inductor is NOT necessary.
  c) for inductive loads use leading edge mode and an inline inductor of > 1mH
- For high level application (medical, stage equipment, ...) we recommend an inline inductor in all operation cases that limits the current increase (tau) to 50 ... 500µs.

5.3.3.6 Technical Data

Outputs:

Number of dimmer outputs 4
Connection technology ..... 1-wire (plus separate supply)
for 4-541*:*
Type ..... leading edge
Output range ..... 0..100%
for 4-542*:*
Type ..... trailing edge
Output range ..... 0...100%
Resolution ..... 10 Bit, 0.1% (related on measure range)
Linearity..... 0.2% (related on measure range)
Accuracy ..... 0.5% (related on measure range)
Filter..... hardware, 1st order, $f_{cut\ off}$ = approx. 100Hz

Others:

Separate supply voltage ..... 230V 50Hz (used for output supply only)
Bus power consumption..... sensor supply@24V, <16mA@3.3V
Isolation bus to I/O..... none (important details: consider to chapter 4)
Status indication ..... LEDs for each digital input, output and for the module status

Mechanics:

Terminals ..... 6, cage clamp Wago250
Connection..... usable with one litz wire from 0.5 – 1.5 mm²
Dimensions ..... 88 x 72 x 20 mm
Weight ..... approx. 85g

5.3.3.7 Process Data Image

Out-Userdata **from** Master to Slave total: 8 Bytes			**In**-Userdata **to** Master from Slave total: 1 Bytes		
Byte	Function	rC Assign...	Byte	Function	rC Assign...
0, 1	Analog Output 1 0...25000 Dig. ≡ 0..100%	... + eB_W0, 0, ...	0	Status Image	+ eB_B0, 0, ...
2, 3	Analog Output 2 0...25000 Dig. ≡ 0..100%	... + eB_W1, 0, ...			
4, 5	Analog Output 3 0...25000 Dig. ≡ 0..100%	... + eB_W2, 0, ...			
6, 7	Analog Output 4 0...25000 Dig. ≡ 0..100%	... + eB_W3, 0, ...			
8	Control Word	…+ eB_B8, 0, 0,…			

Analog Output x

AOV15	AOV14	AOV13	AOV12	AOV11	AOV10	AOV9	AOV8
Bit 15							Bit 8

AOV7	AOV6	AOV5	AOV4	AOV3	AOV2	AOV1	AOV0
Bit 7							Bit 0

Bit 15-0 ..... AOV<15:0>: Analog Output Value (Little Endian)
100 1110 0010 0000 = 20000 (output PWM with 100%)
…
000 0000 0000 0000 =0 (output PWM with 0%)

Control Word (available since version 15)

-	-	-	-	-	-	-	PC
Bit 7							Bit 0

Bit 0 ..... PC: Phase Control
1 = leading edge
0 = trailing edge

Status Image

-	-	-	-	-	-	-	SI
Bit 7							Bit 0

Bit 0 ..... SI: Status Image
1 = zero point detected
0 = no zero point detected

5.3.3.8 Programming Note

In addition to the notes in chapter 4, please regard the following:

5.3.4 **B-4DimLedU-01**

4x LED-Dimmer, PWM, 12-40V

Modul ID	**4-561**			
Order No.	**CAE_B-4DimLedU-01**			
Terminals	**push-in** (for ≤ 0.5mm²)	Core	**M24B**	
Size	**5 eU** (55mm x 72mm)	BB_{FCP}	**1-1-1**	
Variants	**-**			

5.3.4.1 Brief Description

This module contains four independent PWM-LED outputs with a common supply of 12...40V and a selectable PWM-frequency of 83,3/500/1k or 2kHz. The PWM resolution is 24.000 steps.

Each of these channels can control a permanent resistive load of max. 2A and contains a quick acting 2,5A melting fuse for output protection.

5.3.4.2 Connectors and Indication-/Operation-Elements

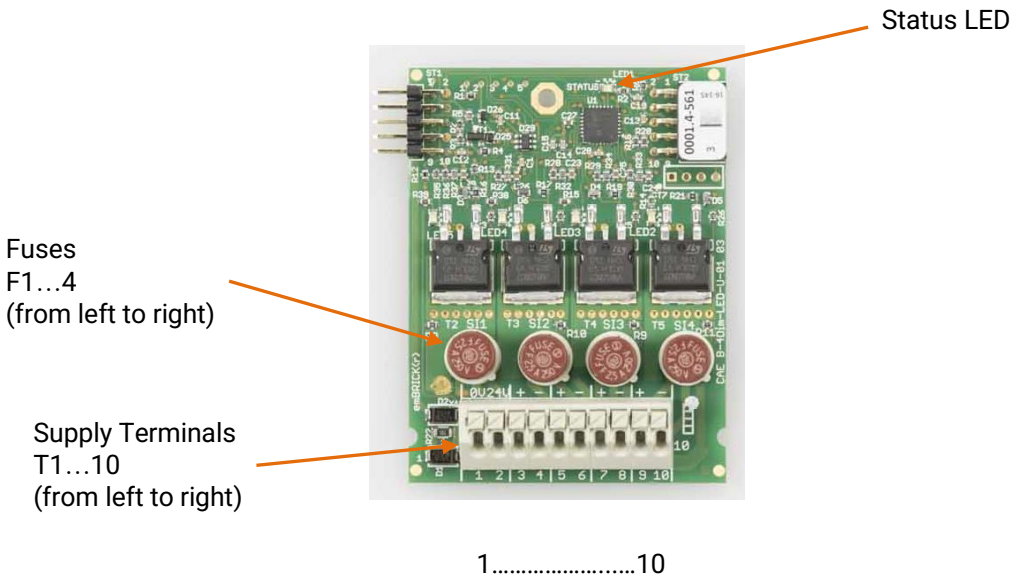

5.3.4.3 Terminal Assignment

Circuit Example	Ident.	Ter.	Function	Usage	internal simplified diagram
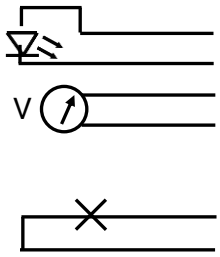	24V	**1**	Supply Input	+24V	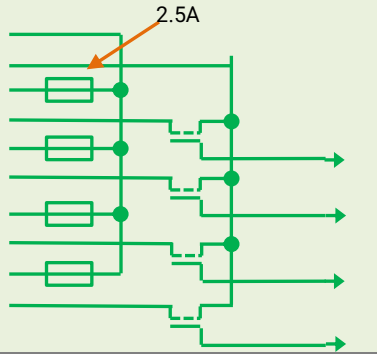
	0V	**2**		GND	
	+	**3**	Dimmer 1	+24V	
	-	**4**		Output	
	+	**5**	Dimmer 2	+24V	
	-	**6**		Output	
	+	**7**	Dimmer 3	+24V	
	-	**8**		Output	
	+	**9**	Dimmer 4	+24V	
	-	**10**		Output	

5.3.4.4 LED Indications

Status-LED ..... module status (see **Fehler! Verweisquelle konnte nicht gefunden werden.**)

5.3.4.5 Application Note

Beside the notes in chapter 4, please regard the following these:

- To save a secure usement each output is fused with F2.5A.
- Depending on the electrical application, the user has to install sufficient additional components to fulfill the EMC-standads.
- Use electrical compatible LEDs or LED-Stripes to your supply voltage, in other cases the LED might not go off totaly or will get broken.

5.3.4.6 Technical Data

Note: For further global specification refer to chapter 4.

Output:
Number of dimmer outputs..... 4
Connection technology 2-wire
Type..... p-switching
Output voltage ..... = level of *separate supply* power
Output current..... max. 2.5A each
Output range ..... 0..100%
Output frequency adjustable .... 83,3Hz…2kHz

Others:
Separate supply voltage ..... 24V DC ±10 % (used for output supply only)
Bus power consumption..... 0mA@24V, <16mA@3.3V
Isolation buses to I/O..... none (important details: consider to chapter 4)
Status indication ..... LEDs for each output and for the module status

Mechanics:
Terminals ..... 10, cage clamp Wago250
Connection..... usable with one litz wire from 0.2 – 0.5 mm²
Dimensions ..... 55 x 72 x 20 mm
Weight ..... approx. 40g

5.3.4.7 Process Data Image

Organisation of the user data communicated via brickBUS:

Out-Userdata **from** Master to Slave total: 8 Bytes			**In**-Userdata **to** Master from Slave total: 12 Bytes		
Byte	Function	rC Assign...	Byte	Function	rC Assign...
0, 1	Analog Output 1 0...24000 Dig. ≡ 0....100%	... + eB_W0, 0, ...	0, 1	State-Dimmer 1	... + eB_W0, 0, ...
2, 3	Analog Output 2 0...24000 Dig. ≡ 0…100%	... + eB_W1, 0, ...	2, 3	State-Dimmer 2	... + eB_W1, 0, ...
4, 5	Analog Output 3 0...24000 Dig. ≡ 0…100%	... + eB_W2, 0, ...	4, 5	State-Dimmer 3	... + eB_W2, 0, ...
6, 7	Analog Output 4 0...24000 Dig. ≡ 0…100%	... + eB_W3, 0, ...	6, 7	State-Dimmer 4	... + eB_W3, 0, ...
8	PWM-Frequency	... + eB_B8, 0, ...	8, 9	State 24V 0...1023 Dig. ≡ 0...42,7V	... + eB_W4, 0, ...

Analog Output x

AOV15	AOV14	AOV13	AOV12	AOV11	AOV10	AOV9	AOV8
Bit 15							Bit 8

AOV7	AOV6	AOV5	AOV4	AOV3	AOV2	AOV1	AOV0
Bit 7							Bit 0

Bit 15-0 ..... AOV<15:0>: Analog Output Value (Little Endian)
0101 1101 1100 0000 = 24000 (output PWM with 100%)
…
0000 0000 0000 0000 =0 (output PWM with 0%)

State Dimmer X

-	-	-	-	-	-	StateD9	StateD8
Bit 15							Bit 8

StateD7	StateD6	StateD5	StateD4	StateD3	StateD2	StateD1	StateD0
Bit 7							Bit 0

Bit 9-0 ..... StateD<9:0>: State Dimmer X (Little Endian)
11 1111 1111 = 1023
…
..... 00 0000 1010 = 10 Fuse OK
..... 00 0000 1001 = 9
…
00 0000 0000 =0 Fuse broken

PWM-Freqency

-	-	-	-	-	-	StateP1	StateP0
Bit 7							Bit 0

Bit 9-0 ..... SateP<1:0>: PWM-Freqency (Little Endian)
11 = 3 (2k Hz)
10 = 2 (1k Hz)
01 = 1 (500 Hz)
00 = 0 (83,3 Hz)

State 24V

-	-	-	-	-	-	StateV9	StateV8
Bit 15							Bit 8

StateV7	StateV6	StateV5	StateV4	StateV3	StateV2	StateV1	StateV0
Bit 7							Bit 0

Bit 9-0 ..... StateV <9:0>: State 24V (Little Endian)
11 1111 1111 = 1023 (42,7V)
…
00 0000 0000 =0 (0V)

5.3.4.8 Programming Note

In addition to the notes in chapter 4, please regard the following:

- State-Dimmer not functional at the moment

5.3.5 B-4DimLedI-0#

4x LED-Dimmer, const. current, 12-40V

Modul ID	**4-565, 4-566**		
Order No.	**CAE_B-4DimLedI-0#** (see below)		
Terminals	**push-in** (for ≤ 0.5mm²)	Core	**M24B**
Size	**5 eU** (55mm x 72mm)	BB_{FCP}	**1-1-1**
Variants (0# =)	**01:** 0..350mA (4-565) **02:** 0..700mA (4-566)		

5.3.5.1 Brief Description

This module contains four independent PWM-LED outputs with a common supply of 12...40V and a PWM-frequency of approx. 670 Hz. The PWM resolution is 24.000 steps.

Each of these channels can control a permanent resistive load of max. 1A and contains a quick acting 1A melting fuse for output protection.

5.3.5.2 Connectors and Indication-/Operation-Elements

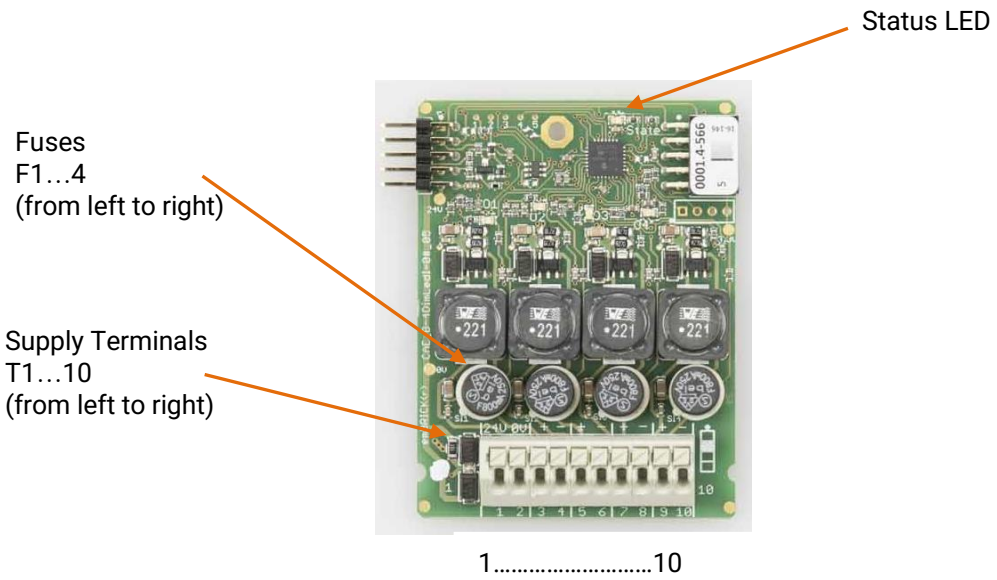

5.3.5.3 Terminal Assignment

Circuit Example	Ident.	Ter.	Function	Usage	internal simplified diagram
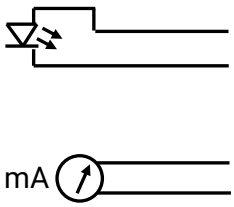	24	1	Supply Input	+24V	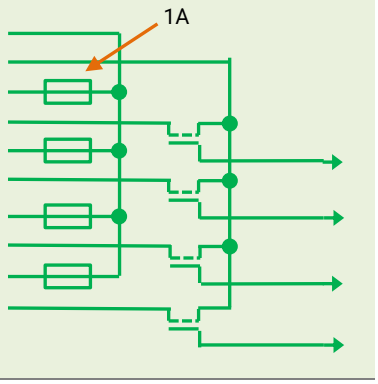
	0	2		GND	
	+	3	Dimmer 1	+24V	
	-	4		Output	
	+	5	Dimmer 2	+24V	
	-	6		Output	
	+	7	Dimmer 3	+24V	
	-	8		Output	
	+	9	Dimmer 4	+24V	
	-	10		Output	

5.3.5.4 LED Indications

Status-LED ..... module status (see **Fehler! Verweisquelle konnte nicht gefunden werden.**)

5.3.5.5 Application Note

In addition to the notes in chapter 4, please regard the following:

- To save a secure usement each output is fused with F0,4/08A (depending on version).

5.3.5.6 Technical Data

Note: For further global specification additionally refer to chapter 4

Output:

Number of dimmer outputs 4
  Connection technology 2-wire
  Type ..... p-switching
  Output voltage ..... = level of *separate supply* power
  Output current ..... max. 1A each
  Output range ..... 0..100%

Others:

Separate supply voltage ..... 24V DC ±10 % (used for output supply only)
Bus power consumption ..... 0mA@24V, <16mA@3.3V
Isolation buses to I/O ..... none (important details: consider to chapter 4)
Status indication ..... LEDs for each output and for the module status

Mechanics:

Terminals ..... 10, cage clamp Wago250
Connection ..... usable with one litz wire from 0.2 – 0.5 mm²
Dimensions ..... 55 x 72 x 20 mm
Weight ..... approx. 40g

5.3.5.7 Process Data Image

Organisation of the user data communicated via brickBUS:

Out-Userdata **from** Master to Slave total: 8 Bytes			**In**-Userdata **to** Master from Slave total: 10 Bytes		
Byte	Function	rC Assign...	Byte	Function	rC Assign...
0, 1	Dimmer 1 0...24000 Dig. ≡ 0...100%	... + eB_W0, 0, ...	0, 1	State-Dimmer 1	... + eB_W0, 0, ...
2, 3	Dimmer 2 0...24000 Dig. ≡ 0…100%	... + eB_W1, 0, ...	2, 3	State-Dimmer 2	... + eB_W1, 0, ...
4, 5	Dimmer 3 0...24000 Dig. ≡ 0...100%	... + eB_W2, 0, ...	4, 5	State-Dimmer 3	... + eB_W2, 0, ...
6, 7	Dimmer 4 0...24000 Dig. ≡ 0…100%	... + eB_W3, 0, ...	6, 7	State-Dimmer 4	... + eB_W3, 0, ...
8	PWM-Frequency	... + eB_B8, 0, ...	8, 9	State 24V 0...1023 Dig. ≡ 0...42,7V	... + eB_W4, 0, ...

Analog Output x

AOV15	AOV14	AOV13	AOV12	AOV11	AOV10	AOV9	AOV8
Bit 15							Bit 8

AOV7	AOV6	AOV5	AOV4	AOV3	AOV2	AOV1	AOV0
Bit 7							Bit 0

Bit 15-0 ..... AOV<15:0>: Analog Output Value (Little Endian)
0101 1101 1100 0000 = 24000 (output PWM with 100%)
…
0000 0000 0000 0000 =0 (output PWM with 0%)

PWM-Freqency

-	-	-	-	-	-	StateP1	StateP0
Bit 7							Bit 0

Bit 9-0 ..... SateP<1:0>: PWM-Freqency (Little Endian)
11 = 3 (2k Hz)
10 = 2 (1k Hz)
01 = 1 (500 Hz)
00 = 0 (83,3 Hz)

State Dimmer X

-	-	-	-	-	-	StateD9	StateD8
Bit 15							Bit 8

StateD7	StateD6	StateD5	StateD4	StateD3	StateD2	StateD1	StateD0
Bit 7							Bit 0

Bit 9-0 ..... AOV<9:0>: Analog Output Value (Little Endian)
11 1111 1111 = 1023
…
..... 00 0000 1010 = 10 Fuse OK
..... 00 0000 1001 = 9
…
00 0000 0000 =0 Fuse broken

State 24V

-	-	-	-	-	-	StateV9	StateV8
Bit 15							Bit 8

StateV7	StateV6	StateV5	StateV4	StateV3	StateV2	StateV1	StateV0
Bit 7							Bit 0

Bit 9-0 ..... AOV<9:0>: Analog Output Value (Little Endian)
11 1111 1111 = 1023 (42,7V)
…
00 0000 0000 =0 (0V)

5.3.5.8 Programming Note

In addition to the notes in chapter 4, please regard the following:

- State-Dimmer is functional at the moment

5.3.6 **B-3U3I_400-01**

3x current converter, 2/4-wire
3x voltage converter, 400V, 2-wire

Modul ID	**4-601**		
Order No.	**CAE_B-3U3I_400-01**		
Terminals	**Connectors**	Core	**M24EP_C**
Size	**68mm x 87mm**	BB_{FCP}	**1-1-1**
Variants	-		

5.3.6.1 Brief Description

This module offers three voltage converter inputs and four current converter inputs. Internal has the Brick seven ADC. The voltage inputs support up to 400 V. The current inputs have a variable shunt resistor in front of the ADC. From the current and voltage inputs, the brick calculates the power and phasedifferenz.

5.3.7 B-3U4I-400-##-RB

4x current converter, 2/4-wire
3x voltage converter, 400V, 2-wire

Modul ID	**4-602, 4-603**		
Order No.	**CAE_B-3U4I-400-##-RB**		
Terminals	**Connectors**	Core	**M24EP_C**
Size	**68mm x 87mm**	BB_{FCP}	**1-1-1**
Variants	**01:** external current transformer 1A (4-602) **02:** external current transformer 0,1A (4-603) **10:** external hall sensors (4-610)		

5.3.7.1 Brief Description

This module offers three voltage inputs and three current inputs for external converter. Internal it has an integgigent power meter with seven inputs and measuruing of effective voltage, effective current, power factor/phase shift, effective power and harmonic distorion. The voltage inputs support up to 400Vp. The current inputs have a variable internal shunt resistor in front of the ADC. From the current and voltage inputs, the brick calculates the power and phasedifferenz.

5.3.7.2 Connectors and Indication-/Operation-Elements

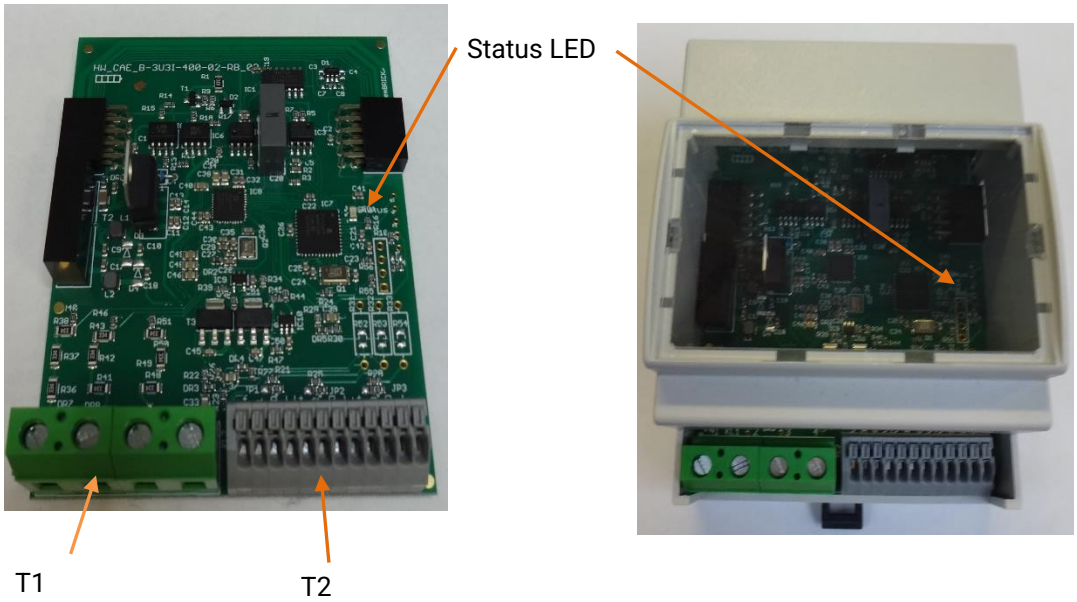

5.3.7.3 Terminal Assignment

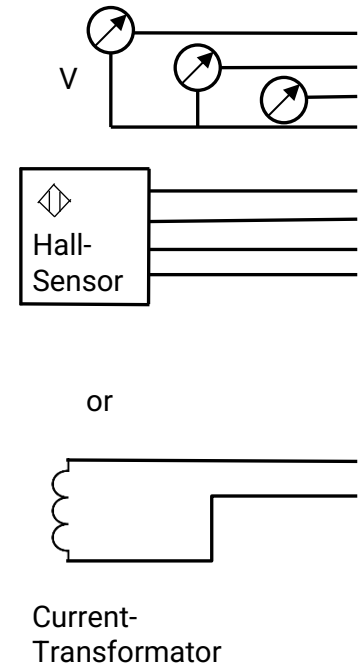

Circuit Example	Ident.	Ter.	Function	Usage	internal simplified diagram
	Terminal T1				
	L1	1	Voltage Inputs	Input	
	L2	2		Input	
	L3	3		Input	
	N	4		GND	
	Terminal T2				
	Vh+	1	Hall Supply +	2,5 V	
	IN1	2	Current Input 1	Input	
	GND	3	Ground	GND	
	Vh-	4	Hall Supply -	-2,5 V	
	Vh+	5	Hall Supply +	2,5 V	
	IN2	6	Current Input 2	Input	
	GND	7	Ground	GND	
	Vh-	8	Hall Supply -	-2,5 V	
	Vh+	9	Hall Supply +	2,5 V	
	IN3	10	Current Input 3	Input	
	GND	11	Ground	GND	
	Vh-	12	Hall Supply -	-2,5 V	

5.3.7.4 LED Indications

Status-LED ..... module status (see **Fehler! Verweisquelle konnte nicht gefunden werden.**)

5.3.7.5 Application Note

In addition to the notes in chapter **4**, please regard the following:

- The values must be calibrated by the emBRICK-Master
- The input GND is isolated to the brickBUS GND
- The measurement is done by an ADE9000
- Tested current Sensors:
  - JC24f-200A

    Measuring range: 0…200A
    Accuracy: ca 1%
    Current transfer ratio: 1/3000
    Transformer Type: Split core current transformer
    Hex to Ampere: 0x2710 = 10000 = 41,217A $(4{,}1217\frac{\text{mA}}{\text{Code}})$
    Hex to Power: 0x2710 = 10000 =73554W $(7{,}3554\frac{\text{W}}{\text{Code}})$
    Oder number:

JC24F-200A		
Current	Hex-Value	Measured Current
9	2150	9
90	21300	89,163
176	41750	174,767

  - Lem-TT-50-SD

Measuring range: 0…50A
Accuracy: ca 1%
Current transfer ratio: 1/3000
Transformer Type: Split core current transformer
Hex to Ampere: 0x2710 = 10000 = 41,217A $(4{,}1217\frac{\mathrm{mA}}{\mathrm{Code}})$
Hex to Power: 0x2710 = 10000 =73554W $(7{,}3554\frac{\mathrm{W}}{\mathrm{Code}})$
Oder number: VIM0-0261-00

- Lem-TT-100-SD
  Measuring range: 0…100A
  Accuracy: ca 1%
  Current transfer ratio: 1/3000
  Transformer Type: Split core current transformer
  Hex to Ampere: 0x2710 = 10000 = 41,217A $(4{,}1217\frac{\mathrm{mA}}{\mathrm{Code}})$
  Hex to Power: 0x2710 = 10000 =73554W $(7{,}3554\frac{\mathrm{W}}{\mathrm{Code}})$
  Oder number: VIM0-0260-00

LEM-TT-100		
Current	Hex-Value	Measured Current
3,6	879	3,6
36	8650	35,427
70,4	17080	69,952

- yhdc SCT013 50A/1V
  Measuring range: 0…50A
  Accuracy: ca 2%
  Transfer ratio: 50A ≡ 1V = 1/500
  Transformer Type: Current to Voltage Transformer yhdc SCT013
  Hex to ampere: 0x2710 = 10000 = 6,8695A $(0{,}6870\frac{\mathrm{mA}}{\mathrm{Code}})$
  Hex to Power: 0x2710 = 10000 =1225,9W $(1{,}2259\frac{\mathrm{W}}{\mathrm{Code}})$
  Oder number:

yhdc sct013 50A/1V		
Current	Hex-Value	Measured Current
2,7	3890	2,7
27	38750	26,896
44	63520	44,088

- yhdc SCT013 30A/1V
  Measuring range: 0…30A
  Accuracy: ca 2%
  Transfer ratio: 30A ≡ 1V = 1/300

Transformer Type: Current to Voltage Transformer
Hex to Ampere: 0x2710 = 10000 = 4,1217A ($0{,}41217\frac{\mathrm{mA}}{\mathrm{Code}}$)
Hex to Power: 0x2710 = 10000 =7355,6W ($0{,}73556\frac{\mathrm{W}}{\mathrm{Code}}$)
Oder number:

yhdc sct013 30A/1A		
Current	Hex-Value	Measured Current
1,35	3230	1,35
13,5	32400	13,542
26,4	64060	26,774

- Talema AZ0500
  Measuring range: 0…25A
  Accuracy: > 5%
  Transfer ratio: 25A ≡ 0,5V =1/500
  Transformer Type: Current to Voltage Transformer
  Hex to Ampere: 0x2710 = 10000 = 0,7104795A ($0{,}710480\frac{\mathrm{mA}}{\mathrm{Code}}$)
  Hex to Power: 0x2710 = 10000 =12259,3W ($1{,}22593\frac{\mathrm{mA}}{\mathrm{Code}}$)
  Oder number:

Talema AZ0500		
Current	Hex-Value	Measured Current
2	2815	2
10	14215	10,0994671
24,24	34589	24,574778

- Talema AZ0750
  Measuring range: 0…40A
  Accuracy: > 5%
  Transfer ratio: 45A ≡ 0,6V =1/750
  Transformer Type: Current to Voltage Transformer
  Hex to Ampere: 0x2710 = 10000 = 10,3043A ($1{,}03043\frac{\mathrm{mA}}{\mathrm{Code}}$)
  Hex to Power: 0x2710 = 10000 = 18389,0W ($1{,}83890\frac{\mathrm{mA}}{\mathrm{Code}}$)

  Oder number:

Talema AZ0500		
Current	Hex-Value	Measured Current
4	3857	4
20	19320	20,0362976
40	38240	39,6577651

- LEM-HO250-S-0100
  Measuring range: 0…200A
  Accuracy: ca 1%

Transfer ratio:	250A ≡ 1V
Transformer Type:	Hall-Sensor

All measured values are calibrated to the measure in the first row.
All sensors are connected by Molex KK connectors

5.3.7.1 Technical Data

Note: For further global specification refer to chapter **4**.

Inputs:

Number of voltage inputs 3
Connection technology 2-wire
Type ..... voltage
Input range (Lx to N) ..... nom. 0...400Vp / 300Veff
Input resistance ..... approx. 1MOhm
Resolution ..... 16 Bit

Number of current inputs ..... 4 (3 useable in correlation with voltage input)

Type (4-602)..... current transformer
Connection technology ..... 2-Wire current transformer
Input resistance ..... internal shunt 0.22 Ohm
InputRange..... 0.25V PGA not adjustableMeasure currentdepends on the current transformer and the internal shunt. the max current over the shunt shouldn't be bigger than +/- 1Ap
Resolution ..... 16 Bit

Typ (4-603) ..... current transformer
Connection technology ..... 2-Wire current transformer
Input resistance ..... internal shunt 8,2 Ohm
InputRange..... 0.25Vp, 0.5Vp, 1Vp depend on PGA settingMeasure current depends on the current transformer and the internal shunt. the max current over the shunt shouldn't be bigger than +/- 0.1Ap

Type (4-610)..... hall sensor
Connection technology 4-wire
Hall sensor
Measure current ..... depends on the hall sensor type
Output Voltage..... max 0…5Vp
Supply current..... max. 25mA each hall sensor
Resolution ..... 16 Bit

Others:

Bus power consumption..... <30mA@24V, <10mA@3.3V
Isolation buses to I/O..... yes
Status indication ..... LEDs for the module status

Mechanics:

Terminals (voltage) 1x Phoen04AKZ710/4
Connection..... usable with one flex wire from 0.2 – 2.5 mm²

Type (B-3U4I-400-01-RB / B-3U4I-400-02-RB)
Terminals (current) ..... 1x 8 (cage camp Wago250, 3,5 Raster)

Type (B-3U4I-400-01p-RB)
Terminals (current) ..... 1x 8 (PTR Buchse 3,5 Pitch)

Type (B-3U4I-400-11-RB)
Terminals (hall) ..... lower terminal 1x 8 (PTR Buchse 3,5 Pitch) 4x (In, GND)
upper terminal 1x 8 (PTR Buchse 2,5 Pitch) 4x (-2,5V, +2,5V

Dimensions ..... 68 x 87 x 21 mm
Weight ..... approx. 50g

5.3.7.2 Process Data Image

Organisation of the user data communicated via brickBUS:

Out-Userdata **from** Master to Slave total: 28 Bytes			**In**-Userdata **to** Master from Slave total: 28 Bytes		
Byte	Function	rC Assign...	Byte	Function	rC Assign...
Page 1					
0	Page Select "Res1" (here 0x01)	... + eB_B0, 0, ...	0	Actual Page	... + eB_B0, 0, ...
1	Trigger Counter to Sub-Brick	... + eB_B1, 0, ...	1	Acknowledge Counter from SubBrick 0..255 Dig	... + eB_B1, 0, ...
2, 3	PGA_Gain see below for details	... + eB_W1, 0, ...	2	Result counter 0..255 Dig	... + eB_B2, 0, ...
			3	reseved	... + eB_B3, 0, ...
4…27	reserved		4, 5	Power P_A (L1) 0… 20209 Dig	... + eB_W2, 0, ...
			6, 7	Power P_B (L2) 0… 20209 Dig	... + eB_W3, 0, ...
			8, 9	Power P_C (L3) 0… 20209 Dig	... + eB_W4, 0, ...
			10, 11	Phase I_A (leads to U_A) 0… 65536 Dig	... + eB_W5, 0, ...
			12, 13	Phase I_B (leads to U_B) 0… 65536 Dig	... + eB_W6, 0, ...
			14, 15	Phase I_C (leads to U_C) 0… 65536 Dig	... + eB_W7, 0, ...
			16, 17	Current $I_{A\ eff}$ 0… 51446 Dig	... + eB_W8, 0, ...
			18, 19	Current $I_{B\ eff}$ 0… 51446 Dig	... + eB_W9, 0, ...
			20, 21	Current $I_{C\ eff}$ 0… 51446 Dig	... + eB_W10, 0, ...
			22, 23	Voltage $U_{A\ eff}$ 0… 51446 Dig	... + eB_W11, 0, ...
			24, 25	Voltage $U_{B\ eff}$ 0… 51446 Dig	... + eB_W12, 0, ...
			26, 27	Voltage $U_{C\ eff}$ 0… 51446 Dig	... + eB_W13, 0, ...
			28, 29	Current $I_{N\ eff}$ 0… 51446 Dig	... + eB_W14, 0, ...

Page Select Res 1 and Trigger Counter to SubBrick

Com. 15	Com. 14	Com. 13	Com. 12	Com.11	Com. 10	Com. 9	Com. 8
Bit 15							Bit 8

Count 7	Count 6	Count 5	Count 4	Count 3	Count 2	Count 1	Count 0
Bit 7							Bit 0

Bit 15-8 ..... Com<15:8>: Page Select
0x01 “Res1”
0x02 “Res 2”
0x03 “Init 1”
0x04 “Init 2”

Bit 7-0 ..... Count<7:0>: Trigger Counter to SubBrick
1111 1111 = Trigger Counter Value: 255

…
0000 0000 = Trigger Counter Value: 0

Actual Page and Acknowledge Counter from SubBrick

Com. 15	Com. 14	Com 13	Com. 12	Com.11	Com. 10	Com. 9	Com. 8
Bit 15							Bit 8

Count 7	Count 6	Count 5	Count 4	Count 3	Count 2	Count 1	Count 0
Bit 7							Bit 0

Bit 15-8 ..... Res<7:0>: The actual Page
1111 1111 = Command 255
…
0000 0000 = Command: 0

Bit 7-0 ..... Count<15:8>: Acknowledge Counter from SubBrick
1111 1111 = Acknowledge Counter value: 255

0000 0000 = Acknowledge Counter value: 0

Result counter and Reserved

Count. 15	Count. 14	Count 13	Count. 12	Count.11	Count. 10	Count. 9	Count. 8
Bit 15							Bit 8

Res 7	Res 6	Res 5	Res 4	Res 3	Res 2	Res 1	Res 0
Bit 7							Bit 0

Bit 15-8 ..... Count<15:8>: Result Counter (goes 1 up if a new result is shifted out)
1111 1111 = Result Counter value: 255

0000 0000 = Result Counter value: 0

Bit 7-0 ..... Res<7:0>: Reserved

PGA GAIN

-	-	CV1	CV 0	BV1	BV 0	AV1	AV 0
Bit 15							Bit 8

NI1	NI 0	CI1	CI 0	BI1	BI 0	AI1	AI 0
Bit 7							Bit 0

Bit 13-12 ..... CV<1:0>: PGA for voltage on phase C (L3)
see AI<0:1>

Bit 12-10 ..... BV<1:0>: PGA for current on phase B (L2)
see AI<0:1>

Bit 9-8 ..... AV<1:0>: PGA for voltage on phase A (L1)
see AI<0:1>

Bit 7-6 ..... NI<1:0>: PGA for current on phase B (N)
see AI<0:1>

Bit 5-4 ..... CI<1:0>: PGA for current on phase B (L3)
see AI<0:1>

Bit 3-2 ..... BI<1:0>: PGA for current on phase B (L2)
see AI<0:1>

Bit 1-0 ..... AI<1:0>: PGA for current on phase A (L1)
11= 3 = x4 Gain
10= 2 = x4 Gain
01= 1 = x2 Gain
00= 0 = x1 Gain

Power Px

Px 15	Px 14	Px13	Px12	Px11	Px10	Px9	Px8
Bit 15							Bit 8

Px7	Px6	Px5	Px4	Px3	Px2	Px1	Px0
Bit 7							Bit 0

Bit 15-0 ..... Px<15:0>: Value power on phase x
0100 1110 1111 0001= Px Value: 20209 (actual value depends on current transformer see 5.3.7.3 Programming Notes)
…
0000 0000 = Px Value: 0

Phase Ix lead to Ux

Ph Ix 15	Ph Ix 14	Ph Ix13	Ph Ix12	Ph Ix11	Ph Ix10	Ph Ix9	Ph Ix8
Bit 15							Bit 8

Ph Ix7	Ph Ix6	Ph Ix5	Ph Ix4	Ph Ix3	Ph Ix2	Ph Ix1	Ph Ix0
Bit 7							Bit 0

Bit 15-0 ..... <15:0>: Value phase shift between Ix and Ux
0101 0000 = Ph Ix Value: 20480 = 360°
…
0000 0000 = Ph Ix Value: 0

Current Ix

Ix 15	Ix 14	Ix13	Ix12	Ix11	Ix10	Ix9	Ix8
Bit 15							Bit 8

Ix7	Ix6	Ix5	Ix4	Ix3	Ix2	Ix1	Ix0
Bit 7							Bit 0

Bit 15-0 ..... I<15:0>: Value of current on phase x
1100 1000 1111 0110= Ix Value: 51446 (actual value depends on current transformer see 5.3.7.3 Programming Notes)
…
0000 0000 = Ix Value: 0

Voltage Vx

Ux 15	Ux 14	Ux13	Ux12	Ux11	Ux10	Ux9	Ux8
Bit 15							Bit 8

Ux7	Ux6	Ux5	Ux4	Ux3	Ux2	Ux1	Ux0
Bit 7							Bit 0

Bit 15-0 ..... V<15:0>: Value of Voltage on Phase x
1100 1000 1111 0110= Vx Value: 51446 *13,6154 = 700,730V
...

Page 2					
0	Page Select "Res2" (here 0x02)	... + eB_B0, 0, ...	0	Actual Page	... + eB_B0, 0, ...
1	Trigger counter to Sub-Brick	... + eB_B1, 0, ...	1	Acknowledge counter from SubBrick 0..255 Dig	... + eB_B1, 0, ...
2, 29	Reserved		2	Result counter 0..255 Dig	... + eB_B2, 0, ...
			3	reseved	... + eB_B3, 0, ...
			2, 3	Distortion I_A 0... 32768 Dig ≡ 0.. 400 %	... + eB_W1, 0, ...
			4, 5	Distortion I_B 0... 32768 Dig ≡ 0.. 400 %	... + eB_W2, 0, ...
			6, 7	Distortion I_C 0... 32768 Dig ≡ 0.. 400 %	... + eB_W3, 0, ...
			8, 9	Distortion V_A 0... 32768 Dig ≡ 0.. 400 %	... + eB_W4, 0, ...
			10, 11	Distortion V_B 0... 32768 Dig ≡ 0.. 400 %	... + eB_W5, 0, ...
			12, 13	Distortion V_C 0... 32768 Dig ≡ 0.. 400 %	... + eB_W6, 0, ...

0000 0000 = Vx Value: 0

Page Select “Res 2”, Trigger Counter to SubBrick and Result counter see Actual Page 1.
To use Page Res 2 send 0x02 in the Command Byte

Total Hamonic Distorsion

THD X15	THD X14	THD X13	THD X12	THD X11	THD X10	THD X 9	THD X 8
Bit 15							Bit 8
THD X 7	THD X 6	THD X 5	THD X 4	THD X 3	THD X 2	THD X 1	THD X 0
Bit 7							Bit 0

Bit 15-0 ..... THD X <7:0>: Total Harmonic Distortion
..... 1000 0000 = 32768 Dig = 400% THD on the current of phase X

..... 0000 0000 = THD 0%

Page 3					
0	Page Select "Init1" (here 0x03)	... + eB_B0, 0, ...	0	Actual Page	... + eB_B0, 0, ...
1	Trigger counter to Sub-Brick	... + eB_B1, 0, ...	1	Acknowledge counter from SubBrick 0..255 Dig	... + eB_B1, 0, ...
2, 3	Register Address	... + eB_W1, 0, ...	2	Result counter 0..255 Dig	... + eB_B2, 0, ...
			3	reseved	... + eB_B3, 0, ...
4	reserved		4...7	Register Value	... + eB_W2, 0, ... + eB_W3, 0, ...
5	Read or Write	... + eB_B5, 0, ...			
6...9	Data to be Written	... + eB_W3, 0, ... + eB_W4, 0, ...			
10...29	Reserved		8...29	reserved	

Page Select “Init1”, Trigger Counter to SubBrick and Result counter see Page 1.
To use Page Init1 send 0x03 in the Page Select Byte

Register Address

				Addr.11	Addr. 10	Addr. 9	Addr. 8
Bit 15							Bit 8

Addr. 7	Addr. 6	Addr. 5	Addr. 4	Addr. 3	Addr. 2	Addr. 1	Addr. 0
Bit 7							Bit 0

Bit 11-0 ..... Addr<11:0>: Address of the register in the ADE9000 you want to access
..... 1111 1111 1111 = Address Value: 4095
...
0000 0000 0000 = Address Value: 0

Read Write

Bit 15							Bit 8

				R/W 3	R/W 2	R/W 1	R/W 0
Bit 7							Bit 0

Bit 3-0 ..... R/W<3:0>Read or write the register
...
1111 = read

..... 0000 = write

Data to be written (Word 3)

Data 15	Data 14	Data 13	Data 12	Data 11	Data 10	Data 9	Data 8
Bit 15							Bit 8

Data 7	Data 6	Data 5	Data 4	Data 3	Data 2	Data 1	Data 0
Bit 7							Bit 0

Bit 15-0 ..... Data<15:0>The Bits <32:16> of the register that you Write
...
1111 1111 1111 1111 = Data Value 65 535

..... 0000 0000 0000 0000 = Data Value 0

Data to be written (Word 4)

Data 15	Data 14	Data 13	Data 12	Data 11	Data 10	Data 9	Data 8
Bit 15							Bit 8

Data 7	Data 6	Data 5	Data 4	Data 3	Data 2	Data 1	Data 0
Bit 7							Bit 0

Bit 15-0 ..... Data<15:0>The Bits <15:0> of the register that you Write
...
1111 1111 1111 1111 = Data Value 65 535

..... 0000 0000 0000 0000 = Data Value 0

Register Value (Word 1)

Data 15	Data 14	Data 13	Data 12	Data 11	Data 10	Data 9	Data 8
Bit 15							Bit 8

Data 7	Data 6	Data 5	Data 4	Data 3	Data 2	Data 1	Data 0
Bit 7							Bit 0

Bit 15-0 ..... Data<15:0>The Bits <32:16> of the register that you read
...
1111 1111 1111 1111 = Data Value 65 535

..... 0000 0000 0000 0000 = Data Value 0

Register Value (Word 2)

Data 15	Data 14	Data 13	Data 12	Data 11	Data 10	Data 9	Data 8
Bit 15							Bit 8

Data 7	Data 6	Data 5	Data 4	Data 3	Data 2	Data 1	Data 0
Bit 7							Bit 0

Bit 15-0 ..... Data<15:0>The Bits <15:0> of the register that you read
...
1111 1111 1111 1111 = Data Value 65 535

..... 0000 0000 0000 0000 = Data Value 0

Page 4					
0	Page Select "Init2" (here 0x04)	... + eB_B0, 0, ...	0	Actual Page	... + eB_B0, 0, ...
1	Trigger counter to Sub-	... + eB_B1, 0, ...	1	Acknowledge counter from	... + eB_B1, 0, ...

	Brick			SubBrick 0..255 Dig	
2, 3	Gain Current A	... + eB_W1, 0, ...	2	Result counter 0..255 Dig	... + eB_B2, 0, ...
4, 5	Gain Current B	... + eB_W2, 0, ...	3	reseved	... + eB_B3, 0, ...
6, 7	Gain Current C	... + eB_W3, 0, ...	2...29	reserved	
8, 9	Gain Current N	... + eB_W4, 0, ...			
10	reserved				
11	Average Depth	... + eB_B11, 0, ...			
12, 13	Gain Voltage (all)	... + eB_W6, 0, ...			
14...29	reserved				

Page Select “Init2”, Trigger Counter to SubBrick and Result counter see Page 1.
To use Page Init2 send 0x04 in the Page Select Byte

Gain Current X

Gain X 15	Gain X 14	Gain X 13	Gain X 12	Gain X11	Gain X 10	Gain X 9	Gain X 8
Bit 15							Bit 8

Gain X 7	Gain X 6	Gain X 5	Gain X 4	Gain X 3	Gain X 2	Gain X 1	Gain X 0
Bit 7							Bit 0

Bit 15-0 ..... Gain X<15:0>: Gain Current X
..... 1111 1111 1111 1111 = Current Gain Value: 65536
...
0000 0000 0000 0000 = Current Gain Value: 0

Average Depth

Bit 15							Bit 8

			Depth4	Depth3	Depth 2	Depth 1	Depth 0
Bit 7							Bit 0

Bit 4-0 ..... Depth <4:0>: Change the number of results for the mean calculation
..... 1 0010 = Average Depth Value: 20

..... 0001 = Average Depth Value: 1

Gain Voltage

Gain V 15	Gain V 14	Gain V 13	Gain V 12	Gain V 11	Gain V 10	Gain V 9	Gain V 8
Bit 15							Bit 8

Gain V 7	Gain V 6	Gain V 5	Gain V 4	Gain V 3	Gain V 2	Gain V 1	Gain V 0
Bit 7							Bit 0

Bit 15-0 ..... Gain V<15:0>: Gain of all Voltage channels
..... 1111 1111 1111 1111 = Voltage Gain Value: 65536
...
0000 0000 0000 0000 = Voltage Gain Value: 0

5.3.7.3 Programming Note

In Addition to the notes in chapter 5, please regard the following:

- To stabilize the measured results there is build a mean out of the last 10 measurements (pre-set). This can be changed by using Command 5 average depth possible Values 1...50
- Command 1 is pre-set for start-up so to get the results from Command 1 no command change is needed
- To transmit a command to the brick set the command in Byte 0 and increase the received communication counter by 1 and send it back. Now the brick will load the new command and execute it. If you just want to read there is no need to change the communication counter.
- The Brick will provide a new measurement result with a Frequency of $\frac{\text{Frequency on L1} * 2}{\text{Average Depth}}$ Hz. The voltage frequency is capture from L1 that has been done to get the same Time between two measurements
- If there is no voltage connected to L2 the brick will measure with an undefined Frequency.
- Command 3 isn´t implemented
- Transformation factors
  For Voltage value:

$$\frac{10^3}{\sqrt[2]{2} * 52702092 * 0{,}00101} * 2^{10} \frac{\text{mV}}{\text{Code}} \qquad [\, U_x * \frac{\text{mV}}{\text{Code}} = \text{mV}]$$

For Current value:

$$\frac{10^3 * \frac{Outputcurrent\ Transformer}{Inputcurrent\ Transformer}}{\sqrt[2]{2} * 52702092} * 2^{10} \frac{\text{mA}}{\text{Code}} \qquad [\, I_x * \frac{\text{mA}}{\text{Code}} = \text{mA}]$$

For Power value:

$$\frac{2^{10}}{2 * 20694066 * \frac{Outputcurrent\ Transformer}{Inputcurrent\ Transformer} * 0{,}00101} \frac{\text{mW}}{\text{Code}} \qquad [\, P_x * \frac{\text{mW}}{\text{Code}} = \text{mW}]$$

For example, you get 0x1554 back from the Brick as Ua: 0x1554 = 5460
And your transformation is 13,6$\frac{\text{mV}}{\text{Code}}$

$$5460\ Code * 13{,}6 \frac{\text{mV}}{\text{Code}} = 74256 mV = 74{,}256 V$$

The same applies to the other transformation factors

If you use the Standard configuration: 0x2710 = 10000 = 136,154V (13,6154$\frac{\text{mV}}{\text{Code}}$)
For the Current it depends on the transformer that you use.

In standard configuration use the values shown on the description of the sensors
For the Power you can use the following:

$$\frac{0{,}0024518}{\text{Transfer ratio}} \frac{\text{W}}{\text{Code}}$$

e. g. Transfer ratio =1/3000

$$\frac{0{,}0024518}{\frac{1}{3000}} \frac{\text{mW}}{\text{Code}} = 7{,}3554 \frac{\text{W}}{\text{Code}}$$

Otherwise please contact us.

- To calculate the phase shift:

$$\text{Phase shift} = 0{,}017578125 \frac{°}{\text{Code}}$$
$$36° \equiv 0x800 \text{ hex}$$

$$\text{Phase shift } ° = \text{hex value} * 0{,}017578125$$

- For calibration $Hexout = Hexin * (1 + \frac{Gain}{2^{17}})$ this applies to Voltage and Current Channels
  Hexin: measured Value without compensation
  Hexout: measured Value with compensation
  Gain: set gain by command 5 default value is 0

- Command 4 is just for the reason you want to excess a specific register on the ADE9000 there for please read the datasheet of the ADE9000

5.4 CAE P Bricks (Process Control)

Module for process applications, especially water systems/-applications, ...

5.4.1 **P-112Rel#-01**

1x Relay-Output, NO, supply switching
1x Relay-Output, CO, supply switching
2x Relay-Output, NO, supply switching

CAE_P-112RelPow-01: contains an additional AC-current measurement

Modul ID	**5-101 / 5-102**		
Order No.	**CAE_P-112Rel-01** **CAE_P-112RelPow-01**		
Terminals	**push-in** (for ≤ 0.5mm²)	Core	**M16D**
Size	**6 eU** (66mm x 72mm)	BB_{FCP}	**1-1-1**
Variants (# =)	**(none):** no current sensor. (5-101) **Pow:** AC-current sensor (5-102)		

5.4.1.1 Brief Description

This module includes four relays with RC-Part and one independent current measurement. Relay 1 consists of a closing contact and can handle a permanent/pulse current of 5/16A.

Relay 2 is a switchover contact and handles a permanent/pulse current of 5/8A.

Relay 3 and 4 are closing contacts and handle a permanent/pulse current of 4/6A.

The current measurement is developed up to 10A eff.

5.4.1.2 Connectors and Indication-/Operation-Elements

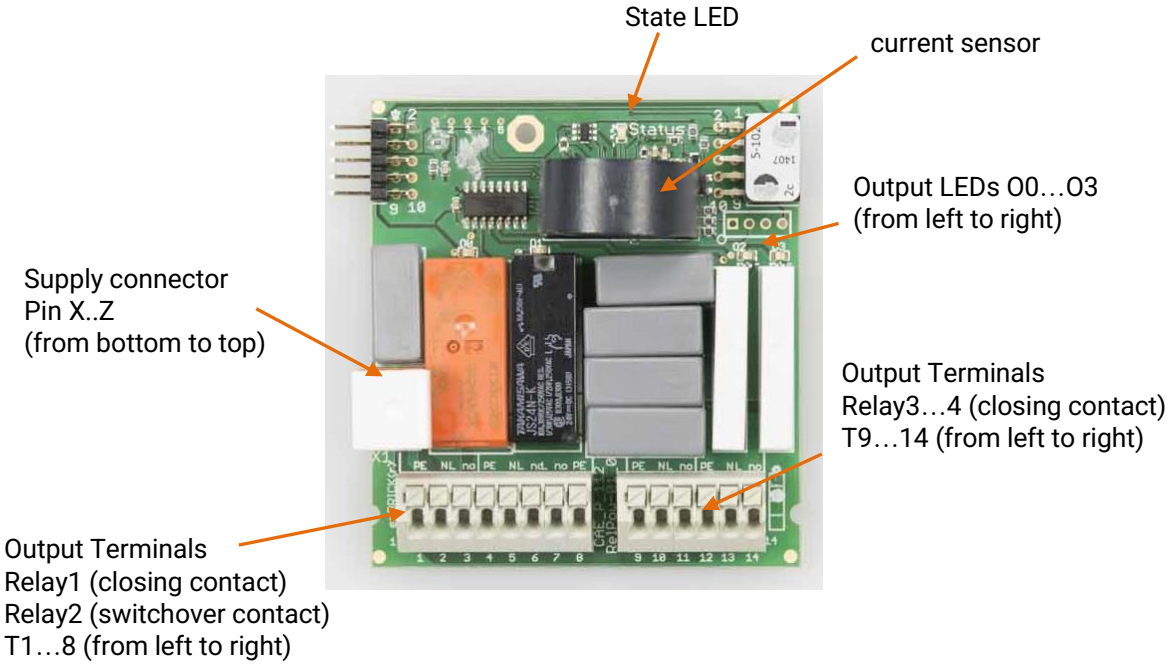

5.4.1.3 Terminal Assignment

Circuit Example	Ident.	Ter.	Function	Usage	internal simplified diagram
		X	Supply	Protective earth	
		Y		Neutral wire	
		Z		Phase 230V	
	PE	**1**	Relay 1	Protective earth	
	N	**2**		Neutral wire	
	Lno	**3**		Closing (230V)	
	PE	**4**	Relay 2	Protective earth	
	N	**5**		Neutral wire	
	Lnc	**6**		Opening (230V)	
	Lno	**7**		Closing (230V)	
	PE	**8**		Protective earth	
	PE	**9**	Relay 3	Protective earth	
	N	**10**		Neutral wire	
	Lno	**11**		Closing (230V)	
	PE	**12**	Relay 4	Protective earth	
	N	**13**		Neutral wire	
	Lno	**14**		Closing (230V)	
			Current Sensor		

5.4.1.4 LED Indications

Output-LED1..4 ..... status indication of the outputs Relay1 ... 4
Status-LED..... module status (see **Fehler! Verweisquelle konnte nicht gefunden werden.**)

5.4.1.5 Application Note

Beside the notes in chapter 4, please regard the following these:

- With the supply over the X-Inject230-20SM-01 the max. current over all is 5A.
- Current measurement is only active when one wire (L or N) is carried through the current sensor only one time.
- All outputs have to be used with the same voltage level.
- On the backside of the PCB the contacts are touchable, so you have to stay the PCB in a housing.

5.4.1.6 Technical Data

Note: For further global specification refer to chapter 4.

Input:

Currentsensor is a peak value measurement at f = 50Hz.

Outputs:

Number of Relays NO..... 3 (normal open)
Number of Relays CO..... 1 (change over)
Type..... 230V ac supplying
Switching voltage ..... max. 230Vac / 30Vdc
for Relay 1:
Switching current ..... max. 5A ac/dc, for details refer to the RT33L024 datasheet
for Relay 2:
Switching current ..... max. 5A ac/dc, for details refer to the JS24NK datasheet
for Relay 3+4:
Switching current ..... max. 5A ac/dc, for details refer to the LYCA024V datasheet

Others:

Separate supply voltage ..... 24V DC ±10 % (used for relay supply only)
Bus power consumption..... 0..42mA@24V, <10mA@3.3V
Status indication ..... LEDs for each output and for the module status

Mechanics:

Terminals ..... 8 + 6, cage clamp Wago250
Connection..... usable with one litz wire from 0.5 – 1.5 mm²
Dimensions ..... 66 x 72 x 20 mm
Weight ..... approx. 100 g

5.4.1.7 Process Data Image:

Organisation of the user data communicated via brickBUS:

Out-Userdata **from** Master to Slave total: 1 Bytes			**In**-Userdata **to** Master from Slave total: 2 Bytes		
Byte	Function	rC Assign...	Byte	Function	rC Assign...
0	Relay Control	... + eB_B0, 0, ... + eB_B0, 3, ...	0, 1	Analog-Input 1 tbd	... + eB_W0, 0, ...

Relay Control

-	-	-	-	REL4	REL3	REL2	REL1
Bit 7							Bit 0

Bit 3-0 ..... REL<4:1>: Relais Output
1 = activate corresponding Relay
0 = deactivate corresponding Relay

Analog Input x

-	-	-	-	-	-	AIV9	AIV8
Bit 15							Bit 8

AIV7	AIV6	AIV5	AIV4	AIV3	AIV2	AIV1	AIV0
Bit 7							Bit 0

Bit 9-0 ..... AIV<9:0>: Analog Input Value (Little Endian)
11 1111 1111 = Analog Input Value: 1023
...
00 0000 0000 = Analog Input Value: 0

5.4.1.8 Programming Note

Beside the notes in chapter 4, please regard the following these:

- Calibrations have to be done in the application software.
- After every communication all inputs will be updated
- To stabilize the messurement results, they should be filtered in the application

5.4.2 **P-2Rel6Di-01**

2x Relay-Output, CO, potential free
6x digital-Inputs, n-switch, 2-wire

Modul ID	**5-122**			
Order No.	**CAE_P-2Rel6Di-01**			
Terminals	**push-in** (≤ 0.5mm²)	Core	**M16E**	
Size	**6 eU** (66mm x 72mm)	BB_{FCP}	**1-1-1**	
Variants	**-**			

5.4.2.1 Brief Description

The Module includes two potential free relays each for max. 5A and six digital inputs. These inputs need an external closing to ground.

5.4.2.2 Connectors and Indication-Operation-Elements

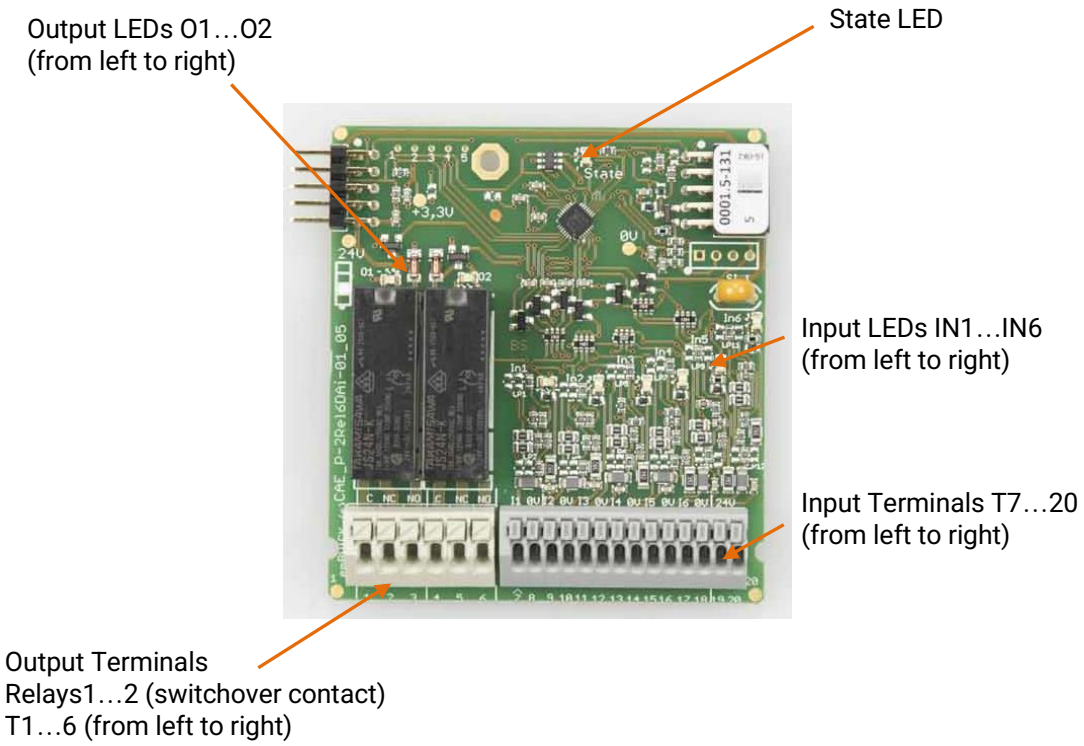

5.4.2.3 Terminal Assignment

Circuit Example	Ident.	Ter.	Function	Usage	internal simplified diagram
24V GND GND	C	1	Relay 1	Common	
	NC	2		NC contact	
	NO	3		NO contact	
	C	4	Relay 2	Common	
	NC	5		NC contact	
	NO	6		NO contact	
	I1	7	Digital-Input 1	Input	
	0V	8		GND	
	I2	9	Digital-Input 2	Input	
	0V	10		GND	
	I3	11	Digital-Input 3	Input	
	0V	12		GND	
	I4	13	Digital-Input 4	Input	
	0V	14		GND	
	I5	15	Digital-Input 5	Input	
	0V	16		GND	
	I6	17	Digital-Input 6	Input	
	0V	18		GND	
	24V	19	Supply terminal	+24V	50mA Polyfuse
	24V	20		+24V	

5.4.2.4 LED Indications

LED Out1…2.. ..... status indication of the *relay1…2*
LED In1...6 ..... status indication of the inputs In1..6
Status-LED ..... module status (see **Fehler! Verweisquelle konnte nicht gefunden werden.**)

5.4.2.5 Application Note

In addition to the notes in chapter 4, please regard the following:

- All six relays have to operate on the same voltage level 230VAC or 24VAC or 24VDC. A mixture of different voltage levels is not allowed.
- The max. 5A are for an AC Application, for DC Application it's 2.5A.
- The user must install an appropriate fuse in the supply line of the relays.
- This module support relay contacts. Depending on the electrical application, the user has to install sufficient additional components to fulfill the EMC-standards and the requirements of the relay producer (see relay datasheet), especially when driving inductive/capacitive or high inrush current loads.

5.4.2.6 Technical Data

Inputs:
Number of digital inputs 6
Connection technology 2-wire
Type..... n-switching
Input current ..... < 5mA

Outputs:
Number of relay outputs 2
Type..... CO (change over), isolated
Switching voltage ..... max. 230Vac / 30Vdc
Switching current ..... max. 5A ac/ 2.5A dc, for details refer to the JS24NK datasheet

Others:
Bus power consumption ..... 0..22mA + sensor supply@24V, 0..15mA@24V, <10mA@3.3V
Isolation buses to I/O..... none (important details: consider to chapter 4)
Status indication ..... LEDs for each digital input, output and for the module status

Mechanics:
Terminals (relays) ..... 6, cage clamp Wago250
Connection (relays) ..... usable with one litz wire from 0.2 – 1.5 mm²
Terminals (others)..... 14, cage clamp Wago250
Connection (others) ..... usable with one litz wire from 0.2 – 0.5 mm²
Dimensions ..... 66 x 72 x 20 mm
Weight ..... approx. 50g

Options:
Plug-in terminals ..... optional available

5.4.2.7 Process Data Image

Out-Userdata **from** Master to Slave total: 1 Bytes			**In**-Userdata **to** Master from Slave total: 1 Bytes		
Byte	Function	rC Assign...	Byte	Function	rC Assign...
0	Relay Control	... + eB_B0, 0, ... + eB_B0, 1, ...	0	Digital Input	... + eB_B0, 0, ... + eB_B0, 5, ...

Relay Control

-	-	-	-	-	-	REL2	REL1
Bit 7							Bit 0

Bit 1-0 ..... REL<2:1>: Relais Output
1 = activate corresponding Relay
0 = deactivate corresponding Relay

Digital Input

-	-	RDI6	RDI5	RDI4	RDI3	RDI2	RDI1
Bit 7							Bit 0

Bit 5-0 ..... RDI<6:1>: Read Digital Inputs
1 = Corresponding Input is HIGH
0 = Corresponding Input is LOW

5.4.2.8 Programming Note

In addition to the notes in chapter 4, please regard the following:

5.4.3 **P-2Rel4Di2Ai-0#**

2x Relay-Output, CO, potential free
4x Digital-Inputs, n-switch, 2-wire
2x Analog-Inputs, 10V/20mA, 2/3wire

Module ID	**5-131, 5-132**			
Order No.	**CAE_P-2Rel4Di2Ai-0#**			
Terminals	**push-in** (for ≤ 0.5mm²)	Core	**M16E**	
Size	**6 eU** (66mm x 72mm)	BB_{FCP}	**1-1-1**	
Variants 0# =	**01:** 0..10V (5-131) **02:** 0..20mA (5-132)			

5.4.3.1 Brief Description

The Module includes two potential free relays, four digital inputs and 2 analog inputs with power supply.

The digital inputs are designed for an external switch / open collector to ground. The analog inputs are either voltage or current inputs, depending on the variant.

5.4.3.2 Connectors and Indication-Operation-Elements

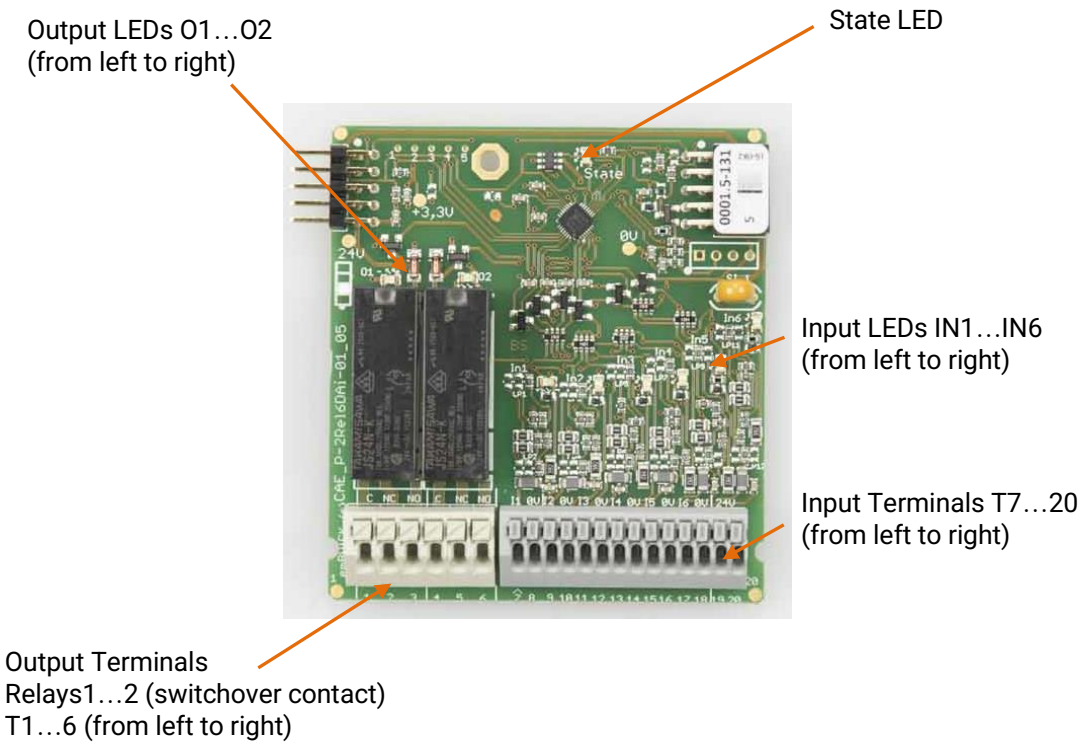

5.4.3.3 Terminal Assignment

Circuit Example	Ident.	Ter.	Function	Usage	internal simplified diagram
	C	**1**	Relay 1	Common	
	NC	**2**		Normaly-closed	
	NO	**3**		Normaly-opend	
	C	**4**	Relay 2	Common	
	NC	**5**		Normaly-closed	
	NO	**6**		Normaly-opend	
	I1	**7**	Digital-Input 1	Input	
	0V	**8**		GND	
	I2	**9**	Digital-Input 2	Input	
	0V	**10**		GND	
	I3	**11**	Digital-Input 3	Input	
	0V	**12**		GND	
	I4	**13**	Digital-Input 4	Input	
	0V	**14**		GND	
	I5	**15**	Analog-Input 1	Input	
	0V	**16**		GND	
	I6	**17**	Analog-Input 2	Input	
	0V	**18**		GND	
	24V	**19**	Sensor supply (out going)	+24V	
	24V	**20**		+24V	

5.4.3.4 LED Indications

LED Out1…2 ..... status indication of the *relays 1…2*
LED In1...4 ..... status indication of the *digital inputs 1...4*
Status LED ..... module status (see **Fehler! Verweisquelle konnte nicht gefunden werden.**))

5.4.3.5 Application Note

In addition to the notes in chapter 4, please regard the following:

- All relays have to operate on the same voltage level 230VAC or 24VAC or 24VDC. A mixture of different voltage levels is not allowed.
- The max. 4A are for an AC Application, for DC Application it´s 2.5A.
- The user must install an appropriate fuse in the supply line of the relays.
- This module support relay contacts. Depending on the electrical application, the user has to install sufficient additional components to fulfill the EMC-standards and the requirements of the relay producer (see relay datasheet), especially when driving inductive/capacitive or high inrush current loads.

5.4.3.6 Technical Data

Inputs:
Number of digital inputs 4
Connection technology 2-wire
Type..... n-switching
Input current ..... < 5mA

Number of analog inputs 2
Connection technology ..... 2/3-wire (supports sensor power supply)
for 5-131:
Type..... voltage
Input range..... nom. 0...10V (full approx. 11.4V , max. 20V permanent)
Input resistance..... approx. 100kOhm
Filter..... hardware, 1st order, $f_{cut\ off}$ = approx. 50Hz
for 5-132:
Type..... current
Input range..... nom. 0...20mA (full approx. 22.7mA, max. 30mA permanent)
Input resistance..... approx. 90Ohm
Filter..... hardware, 1st order, $f_{cut\ off}$ = approx. 100Hz
Resolution..... 10 Bit, 0.1% (related on measure range)
Linearity..... 0.2%
Accuracy 0.5%

Outputs:
Number of relay outputs 2
Type..... CO (change over), isolated
Switching voltage..... max. 230Vac / 30Vdc
Switching current ..... max. 5A ac/ 2.5A, for details refer to the LYCA024V datasheet

Others:
Bus power consumption..... sensor supply@24V, 0..15mA@24V, <10mA@3.3V
Isolation buses to I/O..... none (important details: consider to chapter 4)
Status indication ..... LEDs for each digital input, output and for the module status

Mechanics:
Terminals (relays) ..... 6, cage clamp Wago250
Connection (relays) ..... usable with one litz wire from 0.2 – 1.5 mm²
Terminals (others)..... 14, cage clamp Wago250
Connection (others) ..... usable with one litz wire from 0.2 – 0.5 mm²
Dimensions ..... 66 x 72 x 20 mm
Weight ..... approx. 50g

Options:
Plug-in terminals ..... optional available

5.4.3.7 Process Data Image

Out-Userdata **from** Master to Slave total: 1 Bytes			**In**-Userdata **to** Master from Slave total: 5 Bytes		
Byt	Function	rC Assign...	Byte	Function	rC Assign...
0	Output setting Bit 0 = Relay 1 Bit 1 = Relay 2	... + eB_B0, 0, ... + eB_B0, 1, ...	0, 1	Analog-Input 1 0..783 = 0 .. 10V 0..898 = 0 .. 20mA	... + eB_W0, 0, ...
			2, 3	Analog- Input 2 0..783 = 0 .. 10V 0..898 = 0 .. 20mA	... + eB_W1, 0, ...
			4	Digital Input Bit 0 = Digital-Input 1 ... Bit 3 = Digital-Input 4	... + eB_B4, 0, ...

Relay Control

-	-	-	-	-	-	REL2	REL1
Bit 7							Bit 0

Bit 1-0 ..... REL<2:1>: Relais Output
1 = activate corresponding Relay
0 = deactivate corresponding Relay

Analog Input x

-	-	-	-	-	-	AIV9	AIV8
Bit 15							Bit 8

AIV7	AIV6	AIV5	AIV4	AIV3	AIV2	AIV1	AIV0
Bit 7							Bit 0

Bit 9-0 ..... AIV<9:0>: Analog Input Value (Little Endian)
11 1111 1111 = Analog Input Value: 1023
...
00 0000 0000 = Analog Input Value: 0

Digital Input

-	-			RDI4	RDI3	RDI2	RDI1
Bit 7							Bit 0

Bit 3-0 ..... RDI<4:1>: Read Digital Inputs
1 = Corresponding Input is HIGH
0 = Corresponding Input is LOW

5.4.3.8 Programming Note

In addition to the notes in chapter 4, please regard the following:

- After every communication all inputs will be updated
- To stabilize the measurement results, they should be filtered in the application

5.4.4 **P-6Rel5DiPow-01**

2x Relay-Output, NO, supply switching
2x Relay-Output, CO, supply switching
2x Relay-Output, CO, potential free
5x Digital-Inputs, 2-wire, common gnd
1x AC-Current Input, 2/20 Ap

Modul ID	**5-302**		
Order No.	**CAE_P-6Rel5DiPow-01**		
Terminals	**push-in** (≤ 0.5mm²) **screw-lift** (0,14-1,5mm²)	Core	**M16D**
Size	**10 eU** (110mm x 72mm)	BB$_{FCP}$	**1-1-1**
Variants	**-**		

5.4.4.1 Brief Description

The module includes 6 digital relay outputs, 5 n-switching inputs and 1 inductive AC-current sensor.

The module has two potential free change-over relays which can switch a continouse current of 4A.

Four other relays are able to supply up to 230V. 2 of these are closing and the other 2 are switch-over. Each of the supplying relay can switch up to 5A. The max. permant sum current over the supply outputs is 5A.

5.4.4.2 Connection and Indication-/Operation-Elements

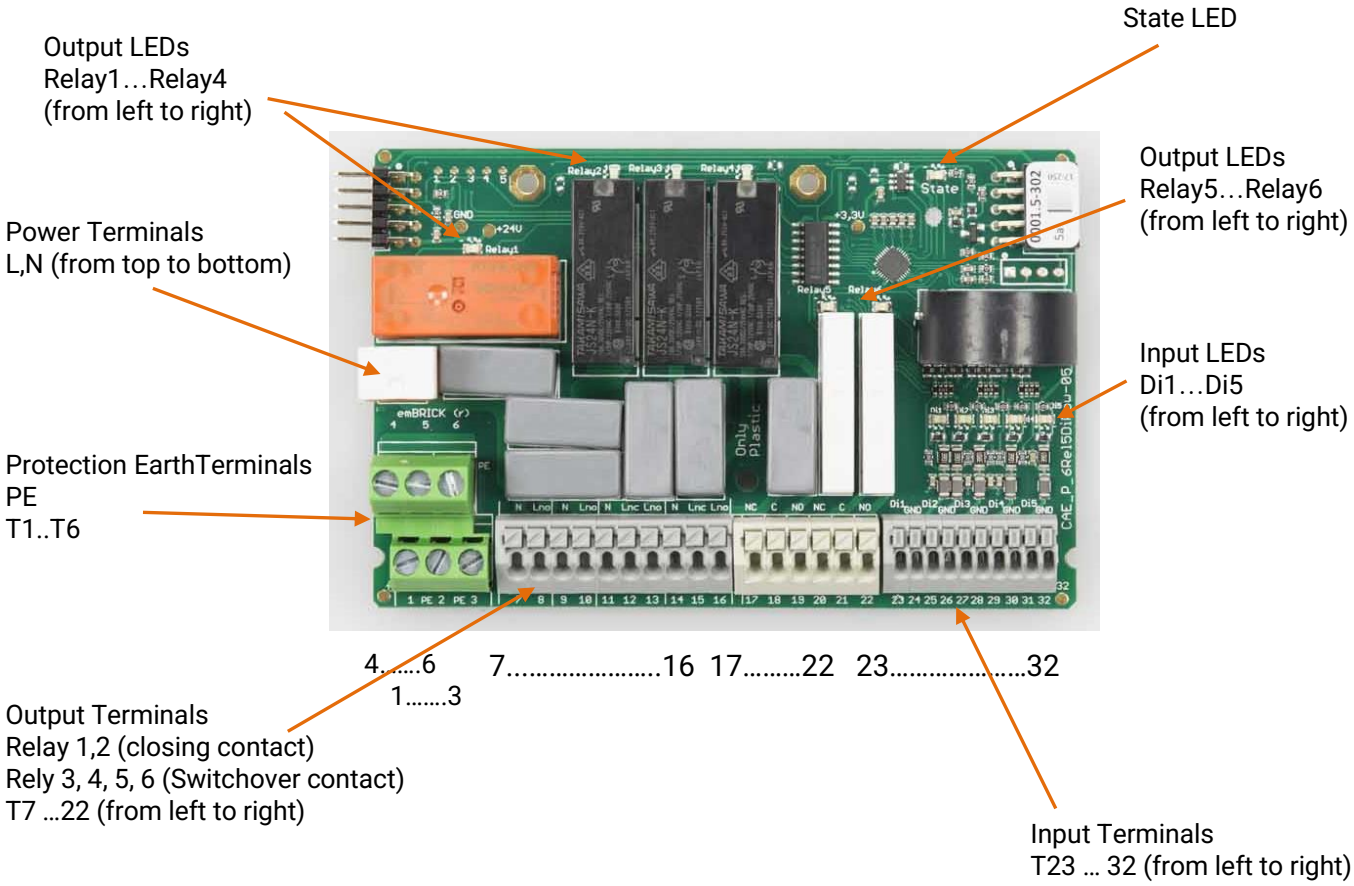

5.4.4.3 Terminal Assignment

Circuit Example	Ident.	Ter.	Function	Usage	internal simplified diagram
			Current Sensor		
	PE	1	PE	Protective earth	
	PE	2		Protective earth	
	PE	3		Protective earth	
	PE	4		Protective earth	
	PE	5		Protective earth	
	PE	6		Protective earth	
	N	7	Relay 1	Neutral wire	
	Lno	8		Closing (230V)	
	N	9	Relay 2	Neutral wire	
	Lno	10		Closing (230V)	
	N	11	Relay 3	Neutral wire	
	Lnc	12		Opening (230V)	
	Lno	13		Closing (230V)	
	N	14	Relay 4	Neutral wire	
	Lnc	15		Opening (230V)	
	Lno	16		Closing (230V)	
	NC	17	Relay 5	Opening	
	C	18		Common	
	NO	19		Closing	
	NC	20	Relay 6	Opening	
	C	21		Common	
	NO	22		Closing	
	Di1	23	Digital-Input 1	Input	
	GND	24		GND	
	Di2	25	Digital-Input 2	Input	
	GND	26		GND	
	Di3	27	Digital-Input 3	Input	
	GND	28		GND	
	Di4	29	Digital-Input 4	Input	
	GND	30		GND	
	Di5	31	Digital-Input 5	Input	
	GND	32		GND	

5.4.4.4 LED Indications

Output LED1..6 ..... status indication of the *Relays 1…6*
Input LED7..11 ..... status indication of the *Digital-Inputs 1..5*
Status-LED ..... module status (see **Fehler! Verweisquelle konnte nicht gefunden werden.**)

5.4.4.5 Application Note

In addition to the notes in chapter 4, please regard the following:

- Make sure that the GND of the analog signals is connected to the 0V terminal. Otherwise the measurement will reduce precision.
- The 2 potential-free relays (Relay 5 + 6) have to operate on the same voltage level 230VAC or 24VAC or 24VDC. A mixture of different voltage levels is **not** allowed.
- Current measurement is only active when one wire (L or N) is carried through the current sensor only one time.
- On the backside of the PCB the contacts are touchable, so you have to keep the PCB in a housing.
- This module support relay contacts. For the two potential free depending on the electrical application, the user has to install sufficient additional components to fulfill the EMC-standards and the requirements of the relay producer (see relay datasheet), especially when driving inductive/capacitive or high inrush current loads. The other four have inbuild RC-Parts on the Board.

5.4.4.6 Technical Data

Note: For further global specifications refer to chapter 4

Input:

Number of digital inputs 5
  Connection technology ..... 2-wire, common ground
  Type ..... n-switching
  Threshold low/high ..... approx. 7,7/13,2V
  Open input voltage ..... approx. 21V @ internal 24V supply from bus
  Pull down current ..... approx. 5mA@24V internal supply

Number of current sensors 1
  current measurement range 0
    voltage ripple ..... 4% @ 50Hz
    filter (falling slope) ..... Tau = 1s
    Input range ..... < 20 A_p (full range = approx. 22 A_p)
  current measurement range 1
    voltage ripple ..... 8% @ 50Hz
    filter (falling slope) ..... Tau = 0,5s
    Input range ..... < 2 A_p (full range = approx. 2 A_p)

Output:

Number of Relays NO..... 2 (normal open)
Number of Relays CO..... 4 (change over)
  Switching voltage ..... 230Vac / 30Vdc
  for Relay 1
    Type ..... 230V supply switching NO
    Switching current..... max. 5A ac/dc, for details refer to the RT33L024 datasheet
  for Relay 2
    Type ..... 230V supply switching NO
    Switching current..... max. 5A ac/dc, for details refer to the JS24NK datasheet
  for Relay 3 + 4
    Type ..... 230V supply switching CO
    Switching current..... max. 5A ac/dc, for details refer to the JS24NK datasheet
  for Relay 5 + 6
    Type ..... isolated CO
    Switching current..... max. 4A ac/dc, for details refer to the LYCA024V datasheet

Others:

Bus power consumption..... 0..75mA@24V, <10mA@3.3V
Isolation buses to I/O..... none (important details: consider to chapter 4)
Status indication ..... LEDs for each input, output and for the module status

Mechanics:

Terminals ..... 1 x 30, cage clamp Wago250
Connection..... usable with one litz wire from 0.2 – 1.5 mm²
Dimensions ..... 110 x 72 x 20 mm
Weight ..... approx. 130g

5.4.4.7 Process Data Image:

Organisation of the user data communicated via brickBUS:

Out-Userdata **from** Master to Slave total: 1 Bytes			**In**-Userdata **to** Master from Slave total: 2 Bytes		
Byte	Function	rC Assign...	Byte	Function	rC Assign...
0	Output setting	... + eB_B0, 5, ... + eB_B0, 0, ... + eB_B0, 6, ...	0, 1	Analog-Input 1	... + eB_W0, 0, ...
			2	Digital Input	... + eB_B2, 1, ... + eB_B2, 5, ...

Relay Control

-	MR	REL1	REL2	REL3	REL4	REL5	REL6
Bit 7							Bit 0

Bit 5-0 ..... REL<1:6>: Relais Output
1 = activate corresponding Relay
0 = deactivate corresponding Relay
Bit 6 ..... MR: Measurement Range
0 = 20 A_p
1 = 2 A_p

Analog Input x

-	-	-	-	-	-	AIV9	AIV8
Bit 15							Bit 8

AIV7	AIV6	AIV5	AIV4	AIV3	AIV2	AIV1	AIV0
Bit 7							Bit 0

Bit 9-0 ..... AIV<9:0>: Analog Input Value (Little Endian)
11 1111 1111 = Analog Input Value: 1023
...
00 0000 0000 = Analog Input Value: 0

Digital Input

-	-	RDI5	RDI4	RDI3	RDI2	RDI1	RDI0
Bit 7							Bit 0

Bit -0 ..... RDI<5:0>: Read Digital Inputs (with RDI0 being the digital status of the analog input)
1 = Corresponding Input is OPEN
0 = Corresponding Input is CLOSED

5.4.4.8 Programming Note

Beside the notes in chapter 4, please regard the following these:

- A calibration has to be done in the applications software.
  for current measurement range = 1
  0,5A_{eff} = 275 digit, 1A_{eff} = 550 digit
  for current measurement range = 0
  1A_{eff} = 50 digit, 5A_{eff} = 250 digit, 10A_{eff} = 500 digit
- After every communication all inputs will be updated
- To stabilize the measurement results, they should be filtered in the application

5.4.5 P-5Rel3DiPoPow-0#

1x Relay-Output, NO, supply switching
1x Relay-Output, CO, supply switching
3x Relay-Output, CO, potential free
3x Digital-Inputs, 2-wire, common gnd
1x Puls-Output, isolated
1x AC-Current Input,2/20 Ap

Modul ID	**5-304, 5-305**		
Order No.	**CAE_P-5Rel3DiPoPow-0#**		
Terminals	**push-in** (≤ 0.5mm²) **screw-lift** (0,14-1,5mm²)	Core	**M16F**
Size	**8 eU** (88mm x 72mm)	BB$_{FCP}$	**1-1-1**
Variants	**01:** without AC current Input (5-304) **02:** with AC current Input (5-305)		

5.4.5.1 Brief Description

The module includes 5 digital relay outputs, 3 n-switching inputs, 1 isolated fast puls output and 1 inductive AC-current sensor.

The module has two potential free change-over relays which can switch a continouse current of 4A.

Four other relays are able to supply up to 230V. 2 of these are closing and the other 2 are switch-over. Each of the supplying relay can switch up to 5A. The max. permant sum current over the supply outputs is 5A.

5.4.5.2 Connection and Indication-/Operation-Elements

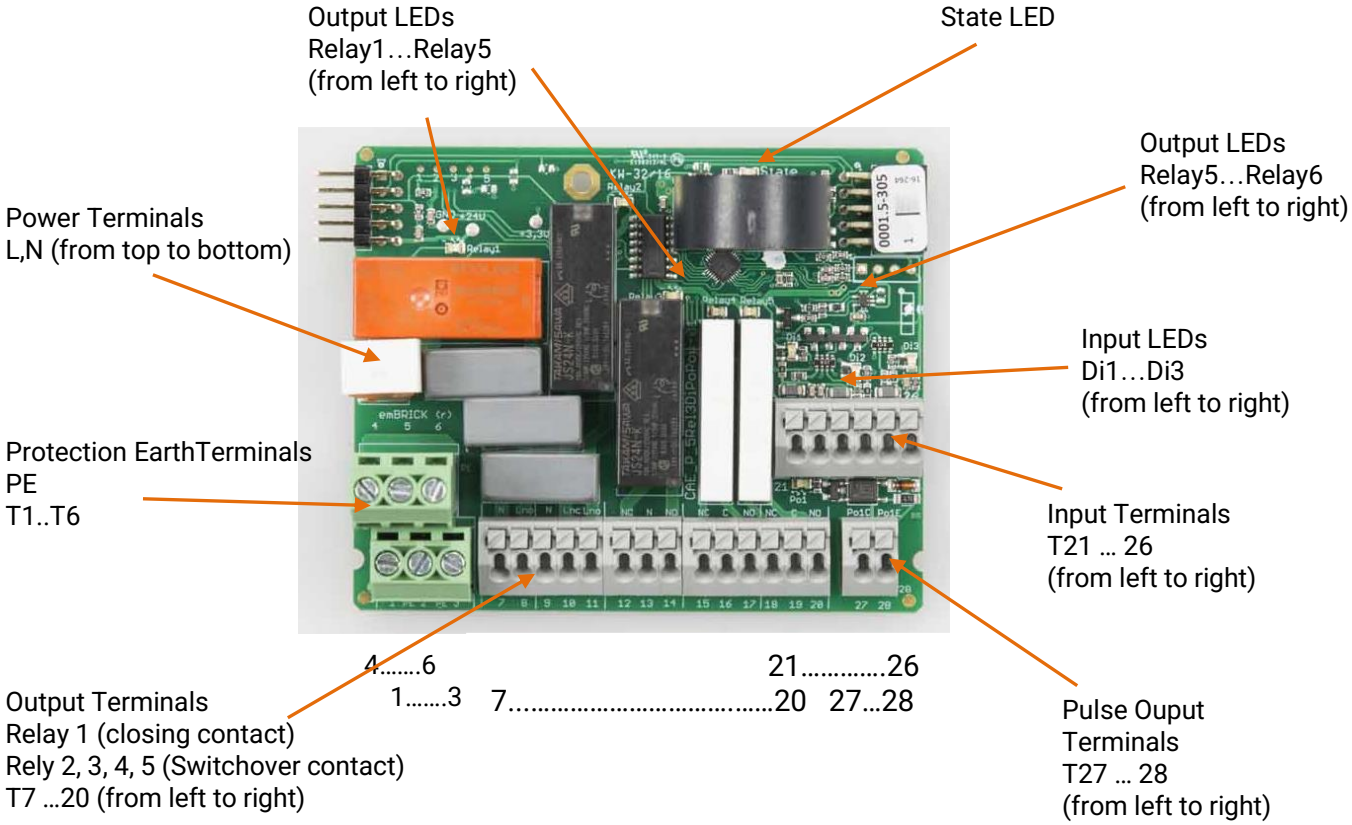

5.4.5.3 Terminal Assignment

Circuit Example	Ident.	Ter.	Function	Usage	internal simplified diagram
			Current Sensor		
	Lsup		Power Supply		
	NSup				
	PE	**1**	PE	Protective earth	
	PE	**2**		Protective earth	
	PE	**3**		Protective earth	
	PE	**4**		Protective earth	
	PE	**5**		Protective earth	
	PE	**6**		Protective earth	
	N	**7**	Relay 1	Neutral wire	
	Lno	**8**		Closing (230V)	
	N	**9**	Relay 2	Neutral wire	
	Lnc	**10**		Opening (230V)	
	Lno	**11**		Closing (230V)	
	NC	**12**	Relay 3	Opening	
	C	**13**		Common	
	NO	**14**		Closing	
	NC	**15**	Relay 4	Opening	
	C	**16**		Common	
	NO	**17**		Closing	
	NC	**18**	Relay 5	Opening	
	C	**19**		Common	
	NO	**20**		Closing	
	Di1	**21**	Digital-Input 1	Input	
	GND	**22**		GND	
	Di2	**23**	Digital-Input 2	Input	
	GND	**24**		GND	
	Di3	**25**	Digital-Input 3	Input	
	GND	**26**		GND	
	PoC	**27**	Puls-Output 1	Collector (+)	
	PoE	**28**		Emitter (-)	

5.4.5.4 LED Indications

Output LED1..5 ..... status indication of the *relays 1…5*
Input LED6..8 ..... status indication of the *Inputs 1...3*
Pulse Output LED ..... status indication of the *Pulse Output 1*
Status-LED ..... module status (see **Fehler! Verweisquelle konnte nicht gefunden werden.**)

5.4.5.5 Application Note

In addition to the notes in chapter **4**, please regard the following:

- Make sure that the GND of the analog signals is connected to the 0V terminal. Otherwise the measurement will reduce precision.
- The 2 potential-free relays (Relay 4 + 5) have to operate on the same voltage level 230VAC or 24Vac/dc. A mixture of different voltage levels is **not** allowed.
- Current measurement is only active when one wire (L or N) is carried through the current sensor only one time.
- On the backside of the PCB the contacts are touchable, so you have to keep the PCB in a housing.

5.4.5.6 Technical Data

Note: For further global specifications refer to chapter **4**

Input:

Number of digital inputs 3
  Connection technology ..... 2-wire, common ground
  Type ..... n-switching
  Threshold low/high ..... approx. 7,7/13,2V
  Open input voltage ..... approx. 21V @ internal 24V supply from bus
  Pull down current ..... approx. 5mA@24V internal supply

Number of current sensors 1
  current measurement range 0
    voltage ripple ..... 4% @ 50Hz
    filter (falling slope) ..... Tau = 1s
    Input range ..... < 20 A_p (full range = approx. 22 A_p)
  current measurement range 1
    voltage ripple ..... 8% @ 50Hz
    filter (falling slope) ..... Tau = 0,5s
    Input range ..... < 2 A_p (full range = approx. 2 A_p)

Output:

Number of Relays NO..... 1 (normal open)
Number of Relays CO..... 4 (change over)
  Switching voltage ..... 230Vac / 30Vdc
  for Relay 1
    Type ..... 230V supply switching NO
    Switching current..... max. 5A ac/dc, for details refer to the RT33L024 datasheet
  for Relay 2
    Type ..... 230V supply switching CO
    Switching current..... max. 5A ac/dc, for details refer to the JS24NK datasheet
  for Relay 3
    Type ..... isolated CO
    Switching current..... max. 4A ac/dc, for details refer to the JS24NK datasheet
  for Relay 4 + 5
    Type ..... isolated CO
    Switching current..... max. 4A ac/dc, for details refer to the LYCA024V datasheet
Number of Pulse Outputs 1
  max. voltage ..... 24V dc
  max. current..... 25mA
  isolation..... galvanic isolated

Others:

Bus power consumption..... 0..75mA@24V (when all inputs and outputs are activated), <10mA@3.3V
Isolation buses to I/O..... none (important details: consider to chapter **4**)
Status indication ..... LEDs for each input, output and for the module status

Mechanics:

Terminals ..... 1 x 30, cage clamp Wago250
Connection..... usable with one litz wire from 0.2 – 1.5 mm²
Dimensions ..... 110 x 72 x 20 mm
Weight ..... approx. 130g

5.4.5.7 Process Data Image:

Organisation of the user data communicated via brickBUS:

Out-Userdata **from** Master to Slave total: 1 Bytes			**In**-Userdata **to** Master from Slave total: 2 Bytes		
Byte	Function	rC Assign...	Byte	Function	rC Assign...
0	Output setting	... + eB_B0, 6, ... + eB_B0, 0, ...	0, 1	Analog-Input 1	... + eB_W0, 0, ...
			2	Digital Input 1 ... Digital Input 3	... + eB_B2, 1, ... + eB_B2, 3, ...

Output setting

-	MR	REL1	REL2	REL3	REL4	REL5	PO1
Bit 7							Bit 0

Bit 0 ..... PO: Pulse Output
1 = activate
0 = deactivate
Bit 5-1 ..... REL<1:5>: Relais Output
1 = activate corresponding Relay
0 = deactivate corresponding Relay
Bit 6 ..... MR: Measurement Range
0 = 20 A_p
1 = 2 A_p

Analog Input x

-	-	-	-	-	-	AIV9	AIV8
Bit 15							Bit 8

AIV7	AIV6	AIV5	AIV4	AIV3	AIV2	AIV1	AIV0
Bit 7							Bit 0

Bit 9-0 ..... AIV<9:0>: Analog Input Value (Little Endian)
11 1111 1111 = Analog Input Value: 1023
...
00 0000 0000 = Analog Input Value: 0

Digital Input

-	-	-	-	RDI3	RDI2	RDI1	RDI0
Bit 7							Bit 0

Bit 3-1 ..... RDI<3:1>: Read Digital Inputs
..... 1 = Corresponding Input is OPEN
..... 0 = Corresponding Input is CLOSED

5.4.5.8 Programming Note

Beside the notes in chapter **4**, please regard the following these:

- A calibration has to be done in the applications software
  - for current measurement range = 1: 0,5A_{eff} = 275 digit, 1A_{eff} = 550 digit
  for current measurement range = 0: 1A_{eff} = 50 digit, 5A_{eff} = 250 digit, 10A_{eff} = 500 digit
- After every communication all inputs will be updated
- To stabilize the analog measurement results, they should be filtered in the application

5.4.6 **P-LfTmpAoDAioImp-0#**

1x LF-Input, conductive, 2-wire
1x Temperature, KTY2K/PT100, 2-wire
1x Analog Output, 0-20mA
1x Analog Input, 10V/20mA,2/3-wire
1x Pulse-In-/Output, n-switch, 2/3-wire
can be used also as a Digital-Input

Modul ID	**5-511, 5-512, 5-513, 5-514**			
Order No.	**CAE_P-LfTmpAoDAioImp-0#**			
Terminal	**push-in** (for ≤ 0.5mm²)	Core	**M24C**	
Size	**4 eU** (44mm x 72mm)	BB_{FCP}	**1-1-1**	
Variants 0# =	**01:** AIn 0/4..20mA; KTY (5-511) **02:** AIn 0..10V, KTY (5-512) **03:** AIn 0/4..20mA ; PT100 (5-513) **04:** AIn 0..10V; PT100 (5-514)			

5.4.6.1 Brief Description

This module contains all IOs for a typical conductivity measurement with a range of 1 ... 4000µS/cm (configurable). It supports the common cell constants of k = 0.01... 1.0 (configurable). An integrated temperature input (for KTY81 or PT100) supplies the necessary temperature compensation.

A special pulse input allows the direct adaption of a hall or reed-contact flow and volume sensor from 0.01 up to 250Hz. Additionally one universal analog input and one output can be used for other analog sensors/actors, both with a range of 0/4 … 20mA.

Furthermore a semiconductor pulse output is present to control e.g. dosing pumps.

5.4.6.2 Connectors and Indication-/Operation-Elements

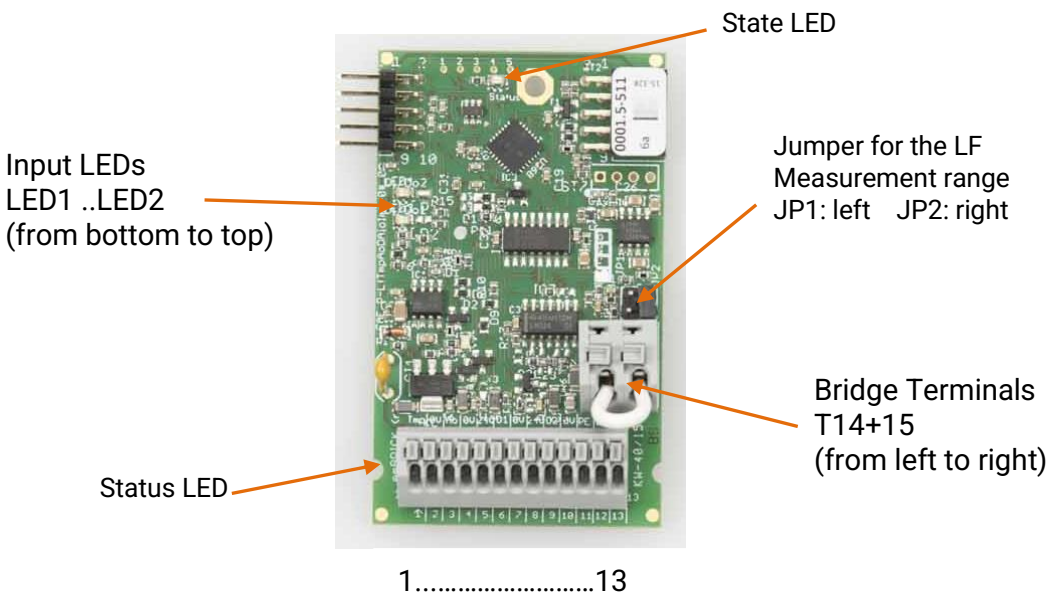

5.4.6.3 Terminal Assignment

Circuit Example	Ident.	Ter.	Function	Usage	internal simplified diagram
	Tmp	**1**	Temp.-Input 1	Sensor KTY81-2k	
	0V	**2**		GND	
	AO	**3**	Analog-Output 1	Output	
	0V	**4**		GND	
	24V	**5**	Analog-Input 1 (with supply)	+24V (Supply.)	
	D1	**6**		Input	
	0V	**7**		GND	
	24V	**8**	puls-Input 1 (with supply) or. Imp.-Output 1 [1)]	+24V (Supply)	
	D2	**9**		Input (Output)	
	0V	**10**		GND	
	PE	**11**	conductance-Input 1	shield	
	LF	**12**		Sensor-Input	
	0V	**13**		GND	
	PE	**14**	Shield bridge	Shield	
	0V	**15**		GND	

5.4.6.4 LED Indications

LED1...2 ..... status indication of the inputs I1..2
Status-LED ..... module status (see **Fehler! Verweisquelle konnte nicht gefunden werden.**)

5.4.6.5 Application Note

In addition to the notes in chapter 4, please regard the following:

- The shield of the sensor should be connected to PE over the PE connector.
- Make sure that the GND of the analog signals is connected to the 0V clamp. Otherwise the measurement will reduce precision.
- For chattering switching contacts on slow frequencies, the configurable filter should be used. On higher frequencies the filter isn't available; therefore a semiconductor contact is recommended.
- With the shield bridge you can choose whether you connect the shield directly on GND or you can only connect it over the PE-pin (14) with PE in your system.
- LED 1 belongs to Analog-Input 1
- LED 2 belongs to pulse input 1
- Whether you use the pulse input for pulses or normal DI/DO operation is only controlled in the software.

5.4.6.6 Technical Data

Input/Output:

Number of analog inputs 1
Connection technology ..... 2/3-wire (supports sensor power supply)
for 5-511:
Type ..... current
Input range ..... nom. 0...20mA (full ADC approx. 0...23.3mA, max. 30mA)
Input resistance ..... approx. 175Ohm
for 5-512:
Type ..... voltage
Input range ..... nom. 0...10V (full ADC approx. 0...10,5V, max. 15)
Input resistance ..... approx. 100kOhm
Resolution ..... 10 Bit, 0.1%
Linearity..... 0.2%
Accuracy 0.5%
Filter..... hardware, 1st order, $f_{cut\ off}$ = approx. 100Hz

Number of pulse inputs 1
Connection technology ..... 2/3-wire (supports sensor power supply)
for 5-511, 5-512:
Type ..... n-switching
Threshold low/high ..... approx. 2.6/10,5V
Open input voltage ..... approx. 18V @ internal 24V supply from bus
Pull down current..... approx. 5mA@24V internal supply
sensitivity ..... rising slope (when open input)
for 5-513, 5-514:
Type ..... p-switching
Threshold low/high ..... approx. 2.6/10,5V
Input resistance ..... 16 kOhm
sensitivity ..... rising slope (when input voltage > threshold)
Frequency gate time..... 10ms ... 65s
Periode measure resolution .... 1 ... 50ms
Frequency/periode counter ..... 16 Bit
Sum counter ..... 14 Bit
Filter..... hardware, 1st order, $f_{cut\ off}$ = approx. 7.5kHz

Number of temperature inputs.. 1
Connection technology 2-wire
for 5-511, 5-512:
Type KTY81-2k
Input range ..... nom. -10...50°C (full ADC approx. - 15...55°C)
Measure current ..... approx. 0.6mA
for 5-513, 5-514:
Type PT100
Input range ..... nom. 0...100°C (full ADC approx. - 7...120°C)
Measure current ..... approx. 0.6mA
Resolution ..... 10 Bit, 0.1%
Resolution ..... 10 Bit, 0.1% (related on measure range)
Linearity..... 0.2% (related on measure range)
Accuracy ..... 0.5% (related on measure range)
Filter..... hardware, 1st order, $f_{cut\ off}$ = approx. 100Hz
Linearization ..... must be done in application software

Number of conductivity inputs .. 1
Range ..... see **Fehler! Verweisquelle konnte nicht gefunden werden. Fehler! Verweisquelle konnte nicht gefunden werden.**

Type..... conductive
Filter..... hardware, 1st order, $f_{cut\ off}$ = approx. 3.4Hz

Number of current outputs..... 1
Range, nominal..... 0/4 to 20mA
Maximum current..... > 25mA
Maximum voltage..... > 12V (load < 600 Ω)
Filter..... hardware, 1st order, $f_{cut\ off}$ = approx. 2Hz

Others:
Bus power consumption..... sensor supply + analog Output + 5mA@24V, <20mA@3.3V
Isolation buses to I/O..... none (important details: consider to chapter 4)
Status indication ..... LEDs for each input, output and for the module status

Mechanics:
Terminals..... 1 x 13, cage clamp Wago250
Connection..... usable with one litz wire from 0.2 – 0.5 mm²
Dimensions ..... 44 x 72 x 20 mm
Weight ..... approx. 40g

Options:
Plug-in terminals ..... optional available

5.4.6.7 Process Data Image

Out-Userdata **from** Master to Slave total: 11 Bytes			**In**-Userdata **to** Master from Slave total: 11 Bytes		
Byte	Function	rC Assign...	Byte	Function	rC Assign...
0, 1	Analog-Output 1 0...12900 Dig. ≡ 0...20.0 mA	... + eB_W0, 0, ...	0, 1	Analog Input 1 (LF Input) assignment see below	... + eB_W0, 0, ...
2, 3	Cond. Measuring Voltage 0...16000 Dig. ≡ 0...100%	... + eB_W1, 0, ...	2, 3	Analog Input 2 (Temp) 205...970 Dig. ≡ 0...50 °C ≡ 1630 und 2417 Ohm	... + eB_W1, 0, ...
4, 5	Cond. Measuring Mode usage see below	… + eB_W2, 0, …	4, 5	Analog-Input 3 0...894 Dig. ≡ 0...20 mA ... or 0...933 Dig. ≡ 0...10 V	... + eB_W2, 0, ...
6, 7	Pulse Input Control 1 usage see below	... + eB_W3, 0, ...	6, 7	Puls Input Sum 1 usage see below	... + eB_W3, 0, ...
8, 9	Pulse Input Attribute 1 usage see below	... + eB_W4, 0, ...	8, 9	Puls Input Difference 1 usage see below.	... + eB_W4, 0, ...
10	Digital Output Do1 Do2	... + eB_B10, 0, ... + eB_B10, 1, ...	10	Input Image Bit 0 = dig. status of analog input1 Bit 1 = dig. status of counter	... + eB_B10, 0, ... + eB_B10, 1, ...

Analog Output 1

-	-	AOV13	AOV12	AOV11	AOV10	AOV9	AOV8
Bit 15							Bit 8

AOV7	AOV6	AOV5	AOV4	AOV3	AOV2	AOV1	AOV0
Bit 7							Bit 0

Bit 13-0 ..... AOV<13:0>: Analog Output Value (Little Endian)
11 0010 0110 0100 = 12900 (output 20mA)
…
00 0000 0000 0000 = 0 (output 0mA)

Analog Output 2 (LF-measuring Voltage)

-	-	AOV13	AOV12	AOV11	AOV10	AOV9	AOV8
Bit 15							Bit 8

AOV7	AOV6	AOV5	AOV4	AOV3	AOV2	AOV1	AOV0
Bit 7							Bit 0

Bit 13-0 ..... AOV<3:0>: Analog Output Value (Little Endian)
11 1110 1000 0000 = 16000 (output PWM with 100%)
…
00 0000 0000 0000 =0 (output PWM with 0%)

Cond. Measuring Mode (Measuring Frequency and Sample Settings)

-	-	-	-	-	MF2	MF1	MF0
Bit 15							Bit 8

SE3	SE2	SE1	SE0	SS3	SS2	SS1	SS0
Bit 7							Bit 0

Bit 3-0 ..... SS<3:0>: Sample Start Value (Little Endian)
1, 2, … ,15 = 1%, 5%, 9 %, …, 57% (0=default 40 %)

Bit 7-4 ..... SE<3:0>: Sample End Value (Little Endian)
1, 2, … ,15 = 5%, 9%, 13 %, …, 61% (0=default 80 %)

Bit 10-8 ..... MF<2:0>: Measuring Frequency
000 = 1 kHz (default)
001 = 2 kHz
010 = 4 kHz
011 = 8 kHz
100 = 500 Hz
101 = 250 Hz
110 = unused
111 = unused

Pulse Input Control x

MODE5	MODE4	MODE3	MODE2	MODE1	MODE0	MSET9	MSET8
Bit 15							Bit 8

MSET7	MSET6	MSET5	MSET4	MSET3	MSET2	MSET1	MSET0
Bit 7							Bit 0

Bit 15-10 ..... MODE<4:0>: Pulse Input operating Mode
110010 = Mode Period Duration with Time Grid 50ms
110001 = Mode Period Duration with Time Grid 49ms
…
000010 = Mode Period Duration with Time Grid 2ms
000001 = Mode Period Duration with Time Grid 1ms
000000 = Mode Fixed Gate Time

Bit 9-0 ..... MSET<9:0>: Mode Settings
in Mode “Period Duration”: Filter Period in ms, to filter out contact chattering (Little Endian):
11 1111 1111 = Filter Period 1023ms
…
00 0000 0000 = Filter Period 0ms
in Mode “Fixed Gate Time”:
Mode Settings has no effect

Pulse Input Attribute x

ATTR15	ATTR14	ATTR13	ATTR12	ATTR11	ATTR10	ATTR9	ATTR8
Bit 15							Bit 8

ATTR7	ATTR6	ATTR5	ATTR4	ATTR3	ATTR2	ATTR1	ATTR0
Bit 7							Bit 0

Bit 15-0: ..... ATTR<15:0>: Additional Pulse Input Attributes
in Mode “Period Duration”: Timeout for 0-setting (Little Endian):
1111 1111 1111 1111 = 65535 * Time Grid
…
0000 0000 0000 0000 = 0
in Mode “Fixed Gate Time”: Gate Time in ms (Little Endian):
1111 1111 1111 1111 = 65535ms
…
0000 0000 0000 0000 = 0ms

Digital Output

-	-	-	-	-	-	Do2	Do1

Bit 7	Bit 0

Bit 1 ..... Do1: digital Output 1
1 = Corresponding Output transistor is ACTIV
0 = Corresponding Output transistor is INACTIV

Bit 0 ..... Do2: digital Output 2
1 = Corresponding Output transistor is ACTIV
0 = Corresponding Output transistor is INACTIV

Analog Input x

-	-	-	-	-	-	AIV9	AIV8
Bit 15							Bit 8

AIV7	AIV6	AIV5	AIV4	AIV3	AIV2	AIV1	AIV0
Bit 7							Bit 0

Bit 9-0 ..... AIV<9:0>: Analog Input Value (Little Endian)
11 1111 1111 = Analog Input Value: 1023
…
00 0000 0000 = Analog Input Value: 0

Pulse Input Sum x

TR1	TR0	PISV13	PISV12	PISV11	PISV10	PISV9	PISV8
Bit 15							Bit 8

PISV7	PISV6	PISV5	PISV4	PISV3	PISV2	PISV1	PISV0
Bit 7							Bit 0

Bit 15-14..... TR<1:0>: Time Reference; 2 Bit Counter that counts up every millisecond. Can be used to compensate the clock deviation of the *emBRICK®*-module.

Bit 13-0 ..... Pulse Input Sum Value; Increments on falling edge; Resets to zero on overflow (Little Endian):
11 1111 1111 1111 = 16383
…
00 0000 0000 0000 = 0

Pulse Input Difference x

PIDV15	PIDV14	PIDV13	PIDV12	PIDV11	PIDV10	PIDV9	PIDV8
Bit 15							Bit 8

PIDV7	PIDV6	PIDV5	PIDV4	PIDV3	PIDV2	PIDV1	PIDV0
Bit 7							Bit 0

Bit 15-0 ..... PIDV<15:0>: Pulse Input Difference Value
in Mode “Fixed Gate Time”:
Displays all fallen edges monitored in the timeframe defined in Pulse Input Attribute x

Input Image

-	-	-	-	-	-	SAI	SC
Bit 7							Bit 0

Bit 1 ..... SAI: digital Status of Analog Input 1
1 = Corresponding Input is HIGH
0 = Corresponding Input is LOW

Bit 0 ..... SC: digital Status of Counter
1 = Corresponding Input is OPEN
0 = Corresponding Input is CLOSED

5.4.6.7.1 Conductivity Ranges / Calibration

The indicated measuring end ranges refers to the given jumper configuration, cell constant and measuring amplitude.

jumper configuration.	measured conductance	corresponds to a sensor value conductivity in medium		measured conductivity	with a measuring amplitude of ...
	approx.	approx.	cell constant	approx.	
jumper JP2	4300µS	4300 µS/cm	K = 1.0	410	10 %
		430 µS/cm	K = 0.1		10 %
jumper JP1	1000µS	1000 µS/cm	K = 1.0	410	10 %
		100 µS/cm	K = 0.1		10 %
		100 µS/cm	K = 1.0		100 %
no jumper	250µS	250 µS/cm	K = 1.0	395	10 %
		25 µS/cm	K = 0.1		10 %
		25 µS/cm	K = 1.0		100 %

Note: The measured conductivity has an offset of 3 ... 8 digits. Therefore an initial zero point calibration (one time, independent of sensor) by software is recommended.

Note: The delivery state of the jumpers are JP2 is set.

The measuring range can be made proportionally more sensitive (less sensitive) by increasing (decreasing) the measuring amplitude. More sensitivity means the same measured value (or a higher value) at less (or the same) sensor conductivity in the medium.

5.4.6.8 Programming Note

In addition to the notes in chapter 4, please regard the following:

- To stabilize the measurement result, they should be filtered in the application

5.4.7 **P-LfTmp2Pi2AiAo**

1x LF-Input, conductive, 2-wire
1x Temperature, PT100, 2-wire
2x Analog Input, 10V/20mA,2/3-wire
2x Pulse-In, n/p-switch, 2/3-wire
can be used also as a Digital-Input
1x Analog Output, 0-20mA

Modul ID	**5-516, 5-517, 5-518**			
Order No.	**CAE_P-LfTmp2Pi2AiAo-0#**			
Terminal	**push-in** (for ≤ 1.5mm²)	Core	**M24C**	
Size	**5 eU** (55mm x 72mm)	BB_{FCP}	**1-1-1**	
Variants 0# =	**01:** AIn 0/4..20mA; npn pulse ; PT100 (5-516) **02:** AIn 0..10V; pnp pulse; PT100 (5-517) **03:** AIn 0/4...20mA; pnp pulse; KTY2K (5-518)			

5.4.7.1 Brief Description

This module contains all IOs for a typical conductivity measurement with a range of 1 ... 4000µS/cm (configurable). It supports the common cell constants of k = 0.01... 1.0 (configurable). An integrated temperature input (for PT100) supplies the necessary temperature compensation.

The two special pulse input allows the direct adaption of a hall or reed-contact flow and volume sensor from 0.01 up to 250Hz. Additionally two universal analog input and one analog output can be used for other analog sensors/actors, both with a range of 0/4 … 20mA.

5.4.7.2 Connectors and Indication-/Operation-Elements

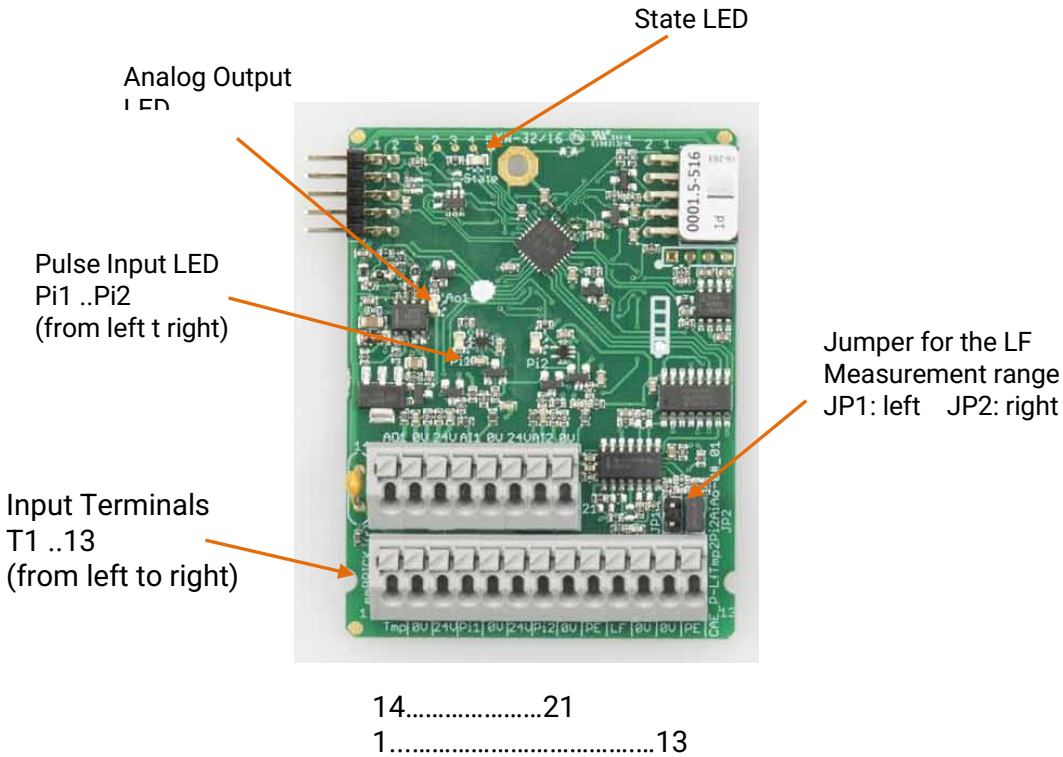

5.4.7.3 Terminal Assignment

Circuit Example	Ident.	Ter.	Function	Usage	internal simplified diagram
	Tmp	**1**	Temp.-Input 1	Sensor PT100	
	0V	**2**		GND	
	24V	**3**	Puls-Input 1 (with supply)	+24V (Supply.)	
	Pi1	**4**		Input	
	0V	**5**		GND	
	24V	**6**	Puls-Input 2 (with supply)	+24V (Supply)	
	Pi2	**7**		Input	
	0V	**8**		GND	
	PE	**9**	conductance-Input 1	Shield	
	LF	**10**		Sensor-Input	
	0V	**11**		GND	
	0V	**12**	Shield bridge	Shield	
	PE	**13**		GND	
	AO1	**14**	Analog-Output 1	Output	
	0V	**15**		GND	
	24V	**16**	Analog-Input 1 (with supply)	+24V (Supply.)	
	AI1	**17**		Input	
	0V	**18**		GND	
	24V	**19**	Analog-Input 2 (with supply)	+24V (Supply.)	
	AI2	**20**		Input	
	0V	**21**		GND	

5.4.7.4 LED Indications

Pulse Input LED1...2 ..... status indication of the inputs Pi1..2
Analog Output LED..... status indication of the analog output Ao1
Status-LED..... module status (see **Fehler! Verweisquelle konnte nicht gefunden werden.**)

5.4.7.5 Application Note

In addition to the notes in chapter **4**, please regard the following:

- The shield of the sensor should be connected to PE over the PE connector.
- Make sure that the GND of the analog signals is connected to the 0V clamp. Otherwise the measurement will reduce precision.
- For chattering switching contacts on slow frequencies, the configurable filter should be used. On higher frequencies the filter isn't available; therefore a semiconductor contact is recommended.
- With the shield bridge you can choose whether you connect the shield, of your sensor line directly, on GND or you can only connect it over the PE-pin (13) with PE in your system.

5.4.7.6 Technical Data

Input/Output:

Number of analog inputs 2
- Connection technology ..... 2/3-wire (supports sensor power supply)
- *for* 5-516:
  - Type ..... current
  - Input range ..... nom. 0...20mA (full ADC approx. 0...23.3mA, max. 30mA)
  - Input resistance ..... approx. 235Ohm
- *for* 5-517:
  - Type ..... voltage
  - Input range ..... nom. 0...10V (full ADC approx. 0...10,5V, max. 15)
  - Input resistance ..... approx. 120kOhm
- Resolution ..... 10 Bit, 0.1%
- Linearity..... 0.2%
- Accuracy 0.5%
- Filter..... hardware, 1st order, $f_{cut\ off}$ = approx. 100Hz

Number of temperature inputs .. 1
- Connection technology 2-wire
- Type PT100
- Input range ..... nom. 0...100°C (full ADC approx. - 7...120°C)
- Measure current ..... approx. 0.6mA
- Resolution ..... 10 Bit, 0.1%
- Linearity..... 0.2%
- Accuracy 0.5%
- Filter..... hardware, 1st order, $f_{cut\ off}$ = approx. 100Hz

Number of conductivity inputs .. 1
- Range ..... see 5.4.7
- Type ..... conductive
- Filter..... hardware, 1st order, $f_{cut\ off}$ = approx. 3.4Hz

Number of pulse inputs 2
- Connection technology ..... 2/3-wire (supports sensor power supply)
- *for 5*-516*:*
  - Type ..... n-switching
  - Threshold low/high ..... approx. 0.6/1V
  - Open input voltage ..... approx. 3.3V @ internal 3.3V supply from bus
  - Pull down current..... approx. 1mA@3.3V internal supply
  - sensitivity ..... rising slope (when open input)
- *for 5*-517*:*
  - Type ..... p-switching
  - Threshold low/high ..... approx. 0.6/1,0V
  - Input resistance ..... 10 kOhm (if active), 47kOhm (if passive)
  - sensitivity ..... rising slope (when input voltage > threshold)
- Frequency gate time..... 10ms ... 65s
- Periode measure resolution .... 1 ... 50ms
- Frequency/periode counter ..... 16 Bit
- Sum counter ..... 14 Bit
- Filter..... hardware, 1st order, $f_{cut\ off}$ = approx. 1,5kHz

Number of current outputs 1
- Range, nominal ..... 0/4 to 20mA
- Maximum current ..... > 25mA
- Maximum voltage..... > 12V (load < 600 Ω)

Filter..... hardware, 1st order, $f_{cut\ off}$ = approx. 2Hz

Others:
Bus power consumption..... sensor supply + analog Output + 5mA@24V, <20mA@3.3V
Isolation buses to I/O..... none (important details: consider to chapter **4**)
Status indication ..... LEDs for each input, output and for the module status

Mechanics:
Terminals ..... 1 x 13 + 1 x 8, cage clamp Wago250
Connection..... usable with one litz wire from 0.2 – 0.5 mm²
Dimensions ..... 55 x 72 x 20 mm
Weight ..... approx. 60g

Options:
Plug-in terminals ..... optional available

5.4.7.7 Process Data Image

Out-Userdata **from** Master to Slave total: 16 Bytes			**In**-Userdata **to** Master from Slave total: 17 Bytes		
Byte	Function	rC Assign...	Byte	Function	rC Assign...
0, 1	Analog-Output 1 0...12900 Dig. ≡ 0...20.0 mA	... + eB_W0, 0, ...	0, 1	Analog Input Conductance assignment see below	... + eB_W0, 0, ...
2, 3	Cond-Measuring Voltage 0...16000 Dig. ≡ 0...100%	... + eB_W1, 0, ...	2, 3	Analog Input Temp 77...872 Dig. ≡ 0...100 °C ≡ 100 und 138,5 Ohm	... + eB_W1, 0, ...
4, 5	Cond. Measuring Mode usage see below	... + eB_W2, 0, ...	4, 5	Analog-Input 1 0...894 Dig. ≡ 0...20 mA ... or 0...933 Dig. ≡ 0...10 V	... + eB_W2, 0, ...
6, 7	not used	... + eB_W3, 0, ...	6, 7	Analog-Input 2 0...894 Dig. ≡ 0...20 mA ... or 0...933 Dig. ≡ 0...10 V	... + eB_W3, 0, ...
8, 9	Pulse Input Control 1 usage see below.	... + eB_W4, 0, ...	8, 9	Puls Input Sum 1 usage see below	... + eB_W4, 0, ...
10, 11	Pulse Input Attribute 1 usage see below.	... + eB_W5, 0, ...	10, 11	Puls Input Difference 1 usage see below.	... + eB_W5, 0, ...
12, 13	Pulse Input Control 2 usage see below.	... + eB_W6, 0, ...	12, 13	Puls Input Sum 2 usage see below	... + eB_W6, 0, ...
14, 15	Pulse Input Attribute 2 usage see below.	... + eB_W7, 0, ...	14, 15	Puls Input Difference 2 usage see below.	... + eB_W7, 0, ...
	not used		16	Input Image Bit 0 = dig. status of counter 1 Bit 1 = dig. status of counter 2 Bit 2 = dig. status of Analog-Input1 Bit 3 = dig. status of Analog-Input2	... + eB_B16, 0, ... + eB_B16, 1, ...

Analog Output 1

-	-	-	-	-	AOV10	AOV9	AOV8
Bit 15							Bit 8

AOV7	AOV6	AOV5	AOV4	AOV3	AOV2	AOV1	AOV0
Bit 7							Bit 0

Bit 9-0 ..... AOV<9:0>: Analog Output Value (Little Endian)
11 0010 0110 0100 = 12900 (output 20mA)
...
00 0000 0000 0000 = 0 (output 0mA)

Analog Output 2 (Cond. Measuring Voltage)

-	-	-	-	-	AOV10	AOV9	AOV8
Bit 15							Bit 8

AOV7	AOV6	AOV5	AOV4	AOV3	AOV2	AOV1	AOV0
Bit 7							Bit 0

Bit 9-0 ..... AOV<9:0>: Analog Output Value (Little Endian)
11 1110 1000 0000 = 16000 (output PWM with 100%)
...
00 0000 0000 0000 =0 (output PWM with 0%)

Cond. Measuring Mode (Measuring Frequency and Sample Settings)

-	-	-	-	-	MF2	MF1	MF0
Bit 15							Bit 8

SE3	SE2	SE1	SE0	SS3	SS2	SS1	SS0
Bit 7							Bit 0

Bit 3-0 ..... SS<3:0>: Sample Start Value (Little Endian)
1, 2, … ,15 = 1%, 5%, 9 %, …, 57% (0=default 40 %)

Bit 7-4 ..... SE<3:0>: Sample End Value (Little Endian)
1, 2, … ,15 = 5%, 9%, 13 %, …, 61% (0=default 80 %)

Bit 10-8 ..... MF<2:0>: Measuring Frequency
000 = 1 kHz (default)
001 = 2 kHz
010 = 4 kHz
011 = 8 kHz
100 = 500 Hz
101 = 250 Hz
110 = unused
111 = unused

Pulse Input Control x

MODE5	MODE4	MODE3	MODE2	MODE1	MODE0	MSET9	MSET8
Bit 15							Bit 8

MSET7	MSET6	MSET5	MSET4	MSET3	MSET2	MSET1	MSET0
Bit 7							Bit 0

Bit 15-10 ..... MODE<4:0>: Pulse Input operating Mode
110010 = Mode Period Duration with Time Grid 50ms
110001 = Mode Period Duration with Time Grid 49ms
…
000010 = Mode Period Duration with Time Grid 2ms
000001 = Mode Period Duration with Time Grid 1ms
000000 = Mode Fixed Gate Time

Bit 9-0 ..... MSET<9:0>: Mode Settings
in Mode “Period Duration”: Filter Period in ms, to filter out contact chattering (Little Endian):
11 1111 1111 = Filter Period 1023ms
…
00 0000 0000 = Filter Period 0ms
in Mode “Fixed Gate Time”:
Mode Settings has no effect

Pulse Input Attribute x

ATTR15	ATTR14	ATTR13	ATTR12	ATTR11	ATTR10	ATTR9	ATTR8
Bit 15							Bit 8

ATTR7	ATTR6	ATTR5	ATTR4	ATTR3	ATTR2	ATTR1	ATTR0
Bit 7							Bit 0

Bit 15-0: ..... ATTR<15:0>: Additional Pulse Input Attributes
in Mode “Period Duration”: Timeout for 0-setting (Little Endian):
1111 1111 1111 1111 = 65535 * Time Grid
…

0000 0000 0000 0000 = 0
in Mode “Fixed Gate Time”: Gate Time in ms (Little Endian):
1111 1111 1111 1111 = 65535ms
…
0000 0000 0000 0000 = 0ms

Analog Input x

-	-	-	-	-	-	AIV9	AIV8
Bit 15							Bit 8

AIV7	AIV6	AIV5	AIV4	AIV3	AIV2	AIV1	AIV0
Bit 7							Bit 0

Bit 9-0 ..... AIV<9:0>: Analog Input Value (Little Endian)
11 1111 1111 = Analog Input Value: 1023
…
00 0000 0000 = Analog Input Value: 0

Pulse Input Sum x

TR1	TR0	PISV13	PISV12	PISV11	PISV10	PISV9	PISV8
Bit 15							Bit 8

PISV7	PISV6	PISV5	PISV4	PISV3	PISV2	PISV1	PISV0
Bit 7							Bit 0

Bit 15-14..... TR<1:0>: Time Reference; 2 Bit Counter that counts up every millisecond. Can be used to compensate the clock deviation of the *emBRICK®*-module.
Bit 13-0 ..... Pulse Input Sum Value; Increments on falling edge; Resets to zero on overflow (Little Endian):
11 1111 1111 1111 = 16383
…
00 0000 0000 0000 = 0

Pulse Input Difference x

PIDV15	PIDV14	PIDV13	PIDV12	PIDV11	PIDV10	PIDV9	PIDV8
Bit 15							Bit 8

PIDV7	PIDV6	PIDV5	PIDV4	PIDV3	PIDV2	PIDV1	PIDV0
Bit 7							Bit 0

Bit 15-0 ..... PIDV<15:0>: Pulse Input Difference Value
in Mode “Fixed Gate Time”:
Displays all fallen edges monitored in the timeframe defined in Pulse Input Attribute x

Input Image

-	-	-	-	SAI2	SAI1	SC2	SC1
Bit 7							Bit 0

Bit 3 ..... SAI2: digital Status of Analog Input 2
1 = Corresponding Input is HIGH
0 = Corresponding Input is LOW
Bit 2 ..... SAI1: digital Status of Analog Input 1
1 = Corresponding Input is HIGH
0 = Corresponding Input is LOW

Bit 1 ..... SC2: digital Status of Counter 2
1 = Corresponding Input is HIGH
0 = Corresponding Input is LOW
Bit 0 ..... SC1: digital Status of Counter 1
1 = Corresponding Input is OPEN
0 = Corresponding Input is CLOSED

5.4.7.7.1 Conductivity Ranges / Calibration

The indicated measuring end ranges refers to the given jumper configuration, cell constant and measuring amplitude.

jumper configuration.	measured conductance	corresponds to a sensor value conductivity in medium		measured conductivity	with a measuring amplitude of ...
	approx.	approx.	cell constant	approx.	
jumper JP2	4300µS	4300 µS/cm	K = 1.0	410	10 %
		430 µS/cm	K = 0.1		10 %
jumper JP1	1000µS	1000 µS/cm	K = 1.0	410	10 %
		100 µS/cm	K = 0.1		10 %
		100 µS/cm	K = 1.0		100 %
no jumper	250µS	250 µS/cm	K = 1.0	395	10 %
		25 µS/cm	K = 0.1		10 %
		25 µS/cm	K = 1.0		100 %

Note: The measured conductivity has an offset of 3 ... 8 digits. Therefore an initial zero point calibration (one time, independent of sensor) by software is recommended.

Note: The delivery state of the jumpers are JP2 is set.

The measuring range can be made proportionally more sensitive (less sensitive) by increasing (decreasing) the measuring amplitude. More sensitivity means the same measured value (or a higher value) at less (or the same) sensor conductivity in the medium.

5.4.8 **P-2LfTmp**

2x LF-Input, conductive, 2-wire
1x Temperature, PT1000/KTY2k, 2-wire

Modul ID	**5-520, 5-521**			
Order No.	**CAE_P-2LfTmp-0#**			
Terminal	**push-in** (for ≤ 1.5mm²)	Core	**M24C**	
Size	**4 eU** (44mm x 72mm)	BB_{FCP}	**1-1-1**	
Variants 0# =	**01:** KTY2k (5-520) **02:** PT1000 (5-521)			

5.4.8.1 Brief Description

This module contains all IOs for two typical conductivity measurements with a range of 1 ... 4000µS/cm (configurable). It supports the common cell constants of k = 0.01... 1.0 (configurable). An integrated temperature input (for KTY2k or PT1000) supplies the necessary temperature compensation.

5.4.8.2 Connectors and Indication-/Operation-Elements

5.4.8.3 Terminal Assignment

Circuit Example	Ident.	Ter.	Function	Usage	internal simplified diagram
	LF1	**1**	Conductance-Input 1	Sensor Input	
	0V	**2**		GND	
	PE	**3**		Shield	
	TMP	**4**	Temp-Input (with supply)	Sensor	
	0V	**5**		GND	
	PE	**6**	Shield-Ground-Bridge	Shield	
	0V	**7**		GND	
	LF2	**8**	Conductance-Input 2	Sensor Input	
	0V	**9**		GND	
	PE	**10**		Shield	

5.4.8.4 LED Indications

Status-LED ..... module status (see **Fehler! Verweisquelle konnte nicht gefunden werden.**)

5.4.8.5 Application Note

- Shield-Ground Bridge
  The PE terminals 3+10 are intended to connect the shield of the sensor line. Then there are two options:
  - Connect the sensor shield to the PE. Therefor use terminal 6 and connect it to the system PE.
  - Connect the sensor shield to the internal GND. Therefor set the Bridge terminal 6 to 7.

5.4.8.6 Technical Data

Input/Output:

Number of temperature inputs .. 1
Connection technology 2-wire
Type ..... KTY81-2k /PT1000
Input range ..... nom. -10...50°C (full ADC approx. - 15...55°C) (KTY81-2k)
..... nom. 0...100°C (full ADC approx. - 7...120°C) (PT100)
Measure current ..... approx. 0.6mA
Resolution ..... 10 Bit, 0.1%
Linearity 0.2%
Accuracy 0.5%
Filter ..... hardware, 1st order, $f_{cut\ off}$ = approx. 100Hz

Number of conductivity inputs .. 2
Range ..... see **Fehler! Verweisquelle konnte nicht gefunden werden. Fehler! Verweisquelle konnte nicht gefunden werden.**
Type ..... conductive
Filter ..... hardware, 1st order, $f_{cut\ off}$ = approx. 3.4Hz

Others:
Bus power consumption ..... <5mA@24V, <20mA@3.3V
Isolation buses to I/O ..... none (important details: consider to chapter **4**)
Status indication ..... LED for the module status

Mechanics:

Terminals ..... 10 x cage clamp Wago250
Connection..... usable with one litz wire from 0.2 – 0.5 mm²
Dimensions ..... 44 x 72 x 20 mm
Weight ..... approx. 60g

5.4.8.7 Process Data Image

Out-Userdata **from** Master to Slave total: 16 Bytes			**In**-Userdata **to** Master from Slave total: 17 Bytes		
Byte	Function	rC Assign...	Byte	Function	rC Assign...
0, 1	LF-Measuring Voltage 1 0...16000 Dig. ≡ 0...100%	... + eB_W0, 0, ...	0, 1	Analog Input 1 (LF Input) assignment see below	... + eB_W0, 0, ...
2, 3	LF-Measuring Voltage 2 0...16000 Dig. ≡ 0...100%	... + eB_W1, 0, ...	2, 3	Analog Input 2 (LF Input) assignment see below	... + eB_W1, 0, ...
4, 5	Cond. Measuring Mode usage see below	... + eB_W2, 0, ...	4, 5	Analog Input 3 (Temp) PT1000: 166...888 Dig. ≡ 0...100 °C ≡ 1000 und 1385 Ohm KTY2k: 205...970 Dig. ≡ 0...50 °C ≡ 1630 und 2417 Ohm	... + eB_W2, 0, ...

Analog Output 1, 2 (LF-measuring Voltage x)

-	-	-	-	-	AOV10	AOV9	AOV8
Bit 15							Bit 8

AOV7	AOV6	AOV5	AOV4	AOV3	AOV2	AOV1	AOV0
Bit 7							Bit 0

Bit 9-0 ..... AOV<9:0>: Analog Output Value (Little Endian)
11 1110 1000 0000 = 16000 (output PWM with 100%)
...
00 0000 0000 0000 =0 (output PWM with 0%)

Cond. Measuring Mode (Measuring Frequency and Sample Settings)

-	-	-	-	-	MF2	MF1	MF0
Bit 15							Bit 8

SE3	SE2	SE1	SE0	SS3	SS2	SS1	SS0
Bit 7							Bit 0

Bit 3-0 ..... SS<3:0>: Sample Start Value (Little Endian)
1, 2, ... ,15 = 1%, 5%, 9 %, ..., 57% (0=default 40 %)

Bit 7-4 ..... SE<3:0>: Sample End Value (Little Endian)
1, 2, ... ,15 = 5%, 9%, 13 %, ..., 61% (0=default 80 %)

Bit 10-8 ..... MF<2:0>: Measuring Frequency
000 = 1 kHz (default)
001 = 2 kHz
010 = 4 kHz
011 = 8 kHz
100 = 500 Hz
101 = 250 Hz

110 = 125 Hz
111 = unused

Analog Input x

-	-	-	-	-	-	AIV9	AIV8
Bit 15							Bit 8

AIV7	AIV6	AIV5	AIV4	AIV3	AIV2	AIV1	AIV0
Bit 7							Bit 0

Bit 9-0 ..... AIV<9:0>: Analog Input Value (Little Endian)
11 1111 1111 = Analog Input Value: 1023
...
00 0000 0000 = Analog Input Value: 0

5.4.8.7.1 Conductivity Ranges / Calibration

The indicated measuring end ranges refers to the given jumper configuration, cell constant and measuring amplitude.

jumper configuration.	measured conductance	corresponds to a sensor value conductivity in medium		measured conductivity	with a measuring amplitude of ...
	approx.	approx.	cell constant	approx.	
jumper JP2	4300µS	4300 µS/cm	K = 1.0	410	10 %
		430 µS/cm	K = 0.1		10 %
jumper JP1	1000µS	1000 µS/cm	K = 1.0	410	10 %
		100 µS/cm	K = 0.1		10 %
		100 µS/cm	K = 1.0		100 %
no jumper	250µS	250 µS/cm	K = 1.0	395	10 %
		25 µS/cm	K = 0.1		10 %
		25 µS/cm	K = 1.0		100 %

Note: The measured conductivity has an offset of 3 ... 8 digits. Therefore an initial zero point calibration (one time, independent of sensor) by software is recommended.

Note: The delivery state of the jumpers are JP2 is set.

The measuring range can be made proportionally more sensitive (less sensitive) by increasing (decreasing) the measuring amplitude. More sensitivity means the same measured value (or a higher value) at less (or the same) sensor conductivity in the medium.

5.4.9 **P-2CcvCav4Do2Imp-01**

2x Clack Control Valves
with 2x Clack-Puls-Flow-Meter
with 2x Resolver Inputs
with 2x IR LED Outputs
1x Clack Alternator Valve
4x Digital Output (for driving LEDs)

Modul ID	**5-601**		
Order No.:	CAE_P-2CcvCav4Do2Imp-01		
Terminals	**push-in** (for ≤ 0.5mm²)	Core	**M25A**
Size	**6 eU** (66mm x 72mm)	BB_{FCP}	**1-1-1**
Variants	-		

5.4.9.1 Brief Description

The module is created to control two Clack-Filter-Valves and one Clack-Alternator-Valve.

Each of the tree valve heads contains of a DC-motor that is controlled by current (to set the torque) and a voltage/current measurement to detect the running state and end positions. The two filter valves also contain an encoder (position determination) and a flow meter (pulse based). The 4 digital outputs are connected to the signal LEDs "production" and "regeneration" on the filter valves.

The third motor controller is realized without an encoder and can only move to the end positions. In the middle no defined positioning is possible.

The module only offers the native In-/Outputs without any own functionality. The control itself has to be achieved by the bus master application.

Note: This module also requires the adaptor board inside the Clack-Filter- Valves such as the CAE_X-Clack9-01.

5.4.9.2 Connectors and Indication-/Operation-Elements

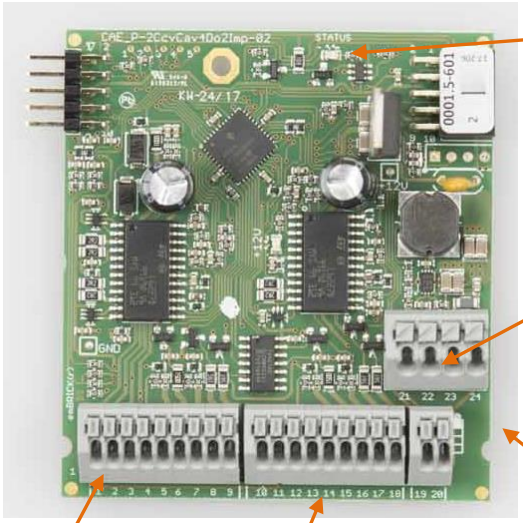

5.4.9.3 Terminal assingment

Circuit Example	Ident.	Ter.	Function	Usage	internal simplified diagram
	(lower terminal row)				
		1	Valve 1	Motor 1, A	
		2		Motor 1, B	
		3		+ 5V	
		4		GND	
		5		Resolver 1 Input	
		6		Resolver 1 LED	
		7		Pulse 1 Input	
		8		Prod-LED 1	
		9		Regen-LED. 1	
		10	Valve 2	Motor 2, A	
		11		Motor 2, B	
		12		+5V	
		13		GND	
		14		Resolver 2 Input	
		15		Resolver 2 LED	
		16		Pulse 2 Input	
		17		Prod. LED 2	
		18		Reg. LED 2	
		19	Valve Alternator	Motor 3, A	
		20		Motor 3, B	
		21	Supply Power	+24V	
		22		GND	
		23		+24V	
		24		GND	

Order of terminal 1..9 corresponds with ESW-Clack Board CB204.

5.4.9.4 LED Indications

Status LED module status (see **Fehler! Verweisquelle konnte nicht gefunden werden.**)

12V LED 12V for motor supply available [ON = yes; OFF = no]

5.4.9.5 Application Note

In addition to the notes in chapter 4, please regard the following:

5.4.9.6 Technical Data

Note: For further global specification refer to chapter 4

Input:
Number of pulse flow inputs 2
Connection technology ..... 1-wire, common ground
Type ..... n-switching
"0" signal voltage ..... -1 ... 0,8V
"1" signal voltage ..... 3 ... 5V
Pull down current ..... < 2mA
Frequency/period counter ..... 16 Bit
Sum counter ..... 14 Bit
Filter ..... hardware, 1st order, $f_{cut\ off}$ = approx. 5kHz
Number of resolver inputs 2
Connection technology ..... 1-wire, common ground
Type ..... n-switching
"0" signal voltage ..... -1 ...0,8V
"1" signal voltage ..... 3 ... 5V
Input current ..... < 2mA
Filter ..... hardware, 1st order, $f_{cut\ off}$ = approx. 1kHz

Output:
Number of digital outputs 6
Connection technology ..... 1-wire, common +5V
Type ..... n-switching
Output ..... open collector with series resistor
active current Res. X LED ..... nom. approx. 22mA
active current Reg. X LED ..... nom. approx. 8mA
active current Prod. X LED ..... nom. approx. 8mA

Number of motor outputs 3
Output current max.500mA

Others:
Separate supply voltage ..... 24V DC ±10 % (used for output supply only)
Bus power consumption ..... 0mA@24V, <10mA@3.3V
Isolation buses to I/O ..... none (important details: consider to chapter 4)
Status indication ..... LEDs for each input, output and for the module status

Mechanics:
Terminals ..... 2 x 9 + 2 +4, cage clamp Wago250
Connection ..... usable with one litz wire from 0.2 – 0.5 mm²
Dimensions ..... 66 x 72 x 25 mm
Weight ..... approx. 30g

Options:
Plug-in terminals ..... optional available

5.4.9.7 Process Data Image

Organisation of the user data communicated via brickBUS:

Out-Userdata **from** Master to Slave total: 24 Bytes	**In**-Userdata **to** Master from Slave total: 26 Bytes

Byte	Function	rC Assign...	Byte	Function	rC Assign...
Valve 1					
0	Control Output 1 usage of bits see below	... + eB_B0, 0, ... + eB_B0, 4, ...	0, 1	Motor 1 - act voltage 600..700 Dig. ≡ ??..?? V	... + eB_W0, 0, ...
2, 3	Motor 1 – set current 0..16383 Dig. ≡ ??.?? mA	... + eB_W1, 0, ...	2, 3	Motor 1 - act. current ???..??? Dig. ≡ ??..?? mA	... + eB_W1, 0, ...
4, 5	not used		4, 5	Resolver 1 - input ???..??? Dig. ≡ ??..?? Inc	... + eB_W2, 0, ...
6, 7	Pulse-Input 1 – control usage see below.	... + eB_W3, 0, ...	6, 7	Pulse-Input 1 - sum usage see below	... + eB_W3, 0, ...
8, 9	Pulse-Input 1 – attribute usage see below.	... + eB_W4, 0, ...	8, 9	Pulse-Input 1- difference usage see below.	... + eB_W4, 0, ...
Valve 2					
10	Control Output 2 usage of bits see below	... + eB_B10, 0, ... + eB_B10, 4, ...	10, 11	Motor 2 - act. voltage ???..??? Dig. ≡ ??..?? V	... + eB_W5, 0, ...
12, 13	Motor 2 - set current 0..16383 Dig. ≡ ??..?? mA	... + eB_W6, 0, ...	12, 13	Motor 2 - act current ???..??? Dig. ≡ ??..?? mA	... + eB_W6, 0, ...
14, 15	not used		14, 15	Resolver 2 - input ???..??? Dig. ≡ ??..?? Inc	... + eB_W7, 0, ...
16, 17	Pulse-Input 2 - control	... + eB_W8, 0, ...	16, 17	Pulse-Input 2 – sum usage see below	... + eB_W8, 0, ...
18, 19	Pulse-Input 2 - attribute	... + eB_W9, 0, ...	18, 19	Pulse-Input 2 – difference usage see below.	... + eB_W9, 0, ...
Valve Alternator					
20	Altern. Control Output	... + eB_B20, 0, ... + eB_B20, 1, ...	20, 21	Motor A – act voltage ???..??? Dig. ≡ ??..?? V	... + eB_W10, 0, ...
22, 23	Motor A - set current 0..16383 Dig. ≡ ??..?? mA	... + eB_W11, 0, ...	22, 23	Motor A – act. current ???..??? Dig. ≡ ??..?? mA	... + eB_W11, 0, ...
Others					
24, 25	not used		24, 25	Power - act. voltage ???..??? Dig. ≡ ??..?? V	... + eB_W12, 0, ...

Control Output x

-	-	-	RES	REG	PROD	DD	DE
Bit 7							Bit 0

Bit 4 ..... RES: activate Resolver LED
1 = activated
0 = deactivated
Bit 3 ..... REG: activate Regeneration LED
1 = activated
0 = deactivated
Bit 2 ..... PROD: activate Production LED
1 = activated
0 = deactivated
Bit 1 ..... DD: set Motor Direction
1 = clockwise
0 = counter clockwise
Bit 0 ..... DE: enable Motor
1 = Drive enabled
0 = Drive disabled

Set Drive Current

-	-	SDC13	SDC12	SDC11	SDC10	SDC9	SDC8
Bit 15							Bit 8

SDC7	SDC6	SDC5	SDC4	SDC3	SDC2	SDC1	SDC0
Bit 7							Bit 0

Bit 13-0 ..... SDC<13:0>: Set Drive Current (Little Endian)
11 1111 1111 1111 = 16383 (100%)
…
00 0000 0000 0000 = 0 (0%)

Pulse Input Control x

MODE5	MODE4	MODE3	MODE2	MODE1	MODE0	MSET9	MSET8
Bit 15							Bit 8

MSET7	MSET6	MSET5	MSET4	MSET3	MSET2	MSET1	MSET0
Bit 7							Bit 0

Bit 15-10 ..... MODE<4:0>: Pulse Input operating Mode
110010 = Mode Period Duration with Time Grid 50ms
110001 = Mode Period Duration with Time Grid 49ms
…
000010 = Mode Period Duration with Time Grid 2ms
000001 = Mode Period Duration with Time Grid 1ms
000000 = Mode Fixed Gate Time

Bit 9-0 ..... MSET<9:0>: Mode Settings
in Mode “Period Duration”: Filter Period in ms, to filter out contact chattering (Little Endian):
11 1111 1111 = Filter Period 1023ms
…
00 0000 0000 = Filter Period 0ms
in Mode “Fixed Gate Time”:
Mode Settings has no effect

Pulse Input Attribute x

ATTR15	ATTR14	ATTR13	ATTR12	ATTR11	ATTR10	ATTR9	ATTR8
Bit 15							Bit 8

ATTR7	ATTR6	ATTR5	ATTR4	ATTR3	ATTR2	ATTR1	ATTR0
Bit 7							Bit 0

Bit 15-0: ..... ATTR<15:0>: Additional Pulse Input Attributes
in Mode “Period Duration”: Timeout for 0-setting (Little Endian):
1111 1111 1111 1111 = 65535 * Time Grid
…
0000 0000 0000 0000 = 0
in Mode “Fixed Gate Time”: Gate Time in ms (Little Endian):
1111 1111 1111 1111 = 65535ms
…
0000 0000 0000 0000 = 0ms

Alt Control Output

-	-	-	-	-	-	DD	DE
Bit 7							Bit 0

Bit 1 ..... DD: set Motor Direction
1 = clockwise
0 = counter clockwise
Bit 0 ..... DE: enable Motor
1 = Drive enabled
0 = Drive disabled

Motor – act. voltage x

-	-	-	-	-	-	AIV9	AIV8
Bit 15							Bit 8

AIV7	AIV6	AIV5	AIV4	AIV3	AIV2	AIV1	AIV0
Bit 7							Bit 0

Bit 9-0 ..... AIV<9:0>: Analog Input Value (Little Endian)
11 1111 1111 = Analog Input Value: 1023
…
00 0000 0000 = Analog Input Value: 0

Motor - act. current x

-	-	-	-	-	-	AIV9	AIV8
Bit 15							Bit 8

AIV7	AIV6	AIV5	AIV4	AIV3	AIV2	AIV1	AIV0
Bit 7							Bit 0

Bit 9-0 ..... AIV<9:0>: Analog Input Value (Little Endian)
11 1111 1111 = Analog Input Value: 1023
…
00 0000 0000 = Analog Input Value: 0

Resolver Input x

CNT15	CNT14	CNT13	CNT12	CNT11	CNT10	CNT9	CNT8
Bit 15							Bit 8

CNT7	CNT6	CNT5	CNT4	CNT3	CNT2	CNT1	CNT0
Bit 7							Bit 0

Bit 15-0 ..... CNT<15:0>: Count Value (Little Endian)
1111 1111 1111 1111 = Count Value: 65535
…
0000 0000 0000 0000 = Count Value: 0

Pulse Input Sum x

TR1	TR0	PISV13	PISV12	PISV11	PISV10	PISV9	PISV8
Bit 15							Bit 8

PISV7	PISV6	PISV5	PISV4	PISV3	PISV2	PISV1	PISV0
Bit 7							Bit 0

Bit 15-14 ..... TR<1:0>: Time Reference; 2 Bit Counter that counts up every millisecond. Can be used to compensate the clock deviation of the *emBRICK®*-module.

Bit 13-0 ..... Pulse Input Sum Value; Increments on falling edge; Resets to zero on overflow (Little Endian):
11 1111 1111 1111 = 16383
…
00 0000 0000 0000 = 0

Pulse Input Difference x

PIDV15	PIDV14	PIDV13	PIDV12	PIDV11	PIDV10	PIDV9	PIDV8
Bit 15							Bit 8

PIDV7	PIDV6	PIDV5	PIDV4	PIDV3	PIDV2	PIDV1	PIDV0
Bit 7							Bit 0

Bit 15-0 ..... PIDV<15:0>: Pulse Input Difference Value
in Mode “Fixed Gate Time”:
Displays all fallen edges monitored in the timeframe defined in Pulse Input Attribute x

Power Voltage x: 12V Power Voltage Input

-	-	-	-	-	-	AIV9	AIV8
Bit 15							Bit 8

AIV7	AIV6	AIV5	AIV4	AIV3	AIV2	AIV1	AIV0
Bit 7							Bit 0

Bit 9-0 ..... AIV<9:0>: Analog Input Value (Little Endian)
11 1111 1111 = Analog Input Value: 1023
…
00 0000 0000 = Analog Input Value: 0

5.4.9.7.1 Controls and Results

t.b.d.

5.4.9.8 Programming Note

In addition to the notes in chapter 4, please regard the following:

5.4.10 **P-2ECell-01**

2x Electrolytic Cell (max. 15V / 500mA)
constant current regulation
current direction switchable
voltage and current measuring

Module ID	**5-602**		
Order No.	**CAE_P-2ECell-01 (-p)**		
Terminals	**push-in** (≤ 0.5mm²)	Core	**M16A**
Size	**4 eU** (44mm x 72mm)	BB_{FCP}	**1-1-1**
Variants	**-**		

5.4.10.1 Brief Description

This module sources an changeable constant current out of two outputs. The polarity is switchable and the current and voltage level is measured.

5.4.10.2 Connectors and Indication-/ Operation-Elements

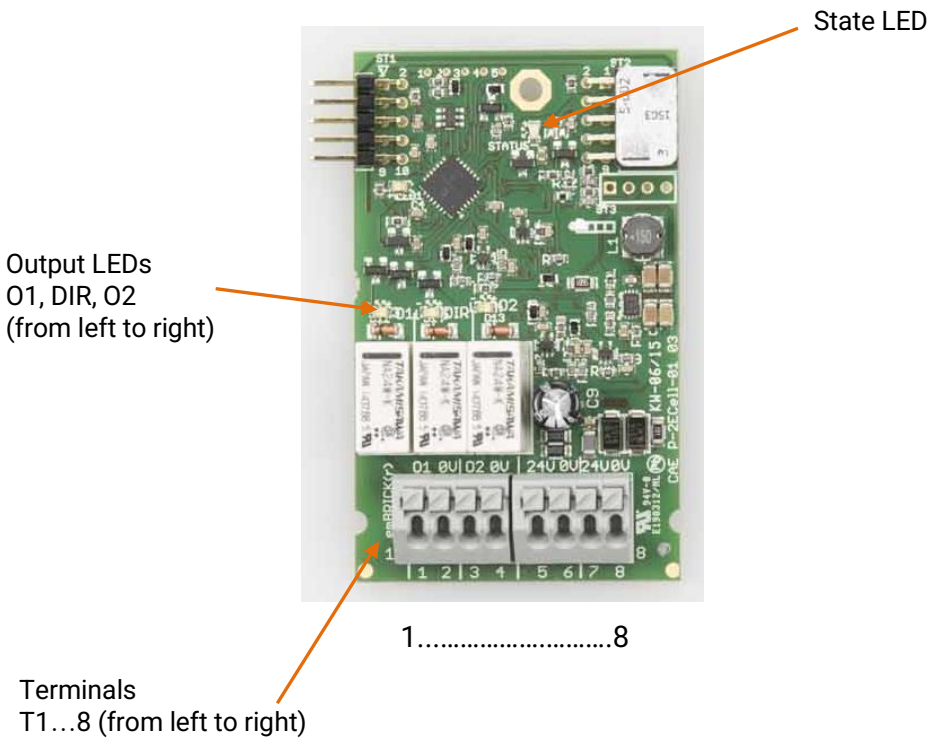

5.4.10.3 Terminal Assignment

Circuit Example	Ident.	Ter.	Function	Usage	internal simplified diagram
	(lower terminal row)				
	O1	**1**	ECell 1	Output	
	0V	**2**		GND	
	O2	**3**	ECell 2	Output	
	0V	**4**		GND	
	24V	**5**	Supply input	24V	
	0V	**6**		GND	
	24V	**7**	Supply output	24V	
	0V	**8**		GND	

5.4.10.4 LED Indications

O1& O2 ..... status indication *output active Cell*
DIR ..... *status indication output current direction*
Status LED ..... module status (see **Fehler! Verweisquelle konnte nicht gefunden werden.**)

5.4.10.5 Application Note

5.4.10.6 Technical Data

Note: For further global specification additionally consider to chapter **4**

Internal analog input:
Number of analog inputs 2
  Connection technology ..... internal
  Type ..... 1x voltage / 1x current
  Input range ..... 2 ... 15V / 50 … 500mA
Resolution ..... 10 Bit, 0.1% (related on measure range)
Linearity..... 0.2%
Accuracy 0.5%

Output:
Number of outputs 2
  Connection technology 2-wire
  Type ..... Electrolytic Cell
  Output voltage ..... 0, 2 … 15V
  Output current..... 0, 50 … 500mA each channel

Others:
Separate supply voltage ..... 24V DC ±10 %, <1A (used for output supply only)
Bus power consumption..... 0mA@24V, <10mA@3.3V
Isolation buses to I/O..... none (important details: consider to chapter **0**)
Status indication ..... LEDs for each output and for the module status

Mechanics:
Terminals ..... 2 x 4, cage clamp Wago250
Connection..... usable with one and litz wire from 0.2 – 0.5 mm²
Dimensions ..... 44 x 72 x 20 mm
Weight ..... approx. 30g

Options:
Plug-in terminals ..... optional available

5.4.10.7 Prozess Data Image

Out-Userdata **from** Master to Slave total: 1 Bytes			**In**-Userdata **to** Master from Slave total: 2 Bytes		
Byte	Function	rC Assign...	Byte	Function	rC Assign...
0, 1	Output Current setting 641 .. 9829 Dig. = 36 .. 453mA	... + eB_W0, ...	0, 1	Analog-Input 1 94…890 Dig. = 50 …500mA	... + eB_W0, ...
2	Relay Control	... + eB_B2,0, ... + eB_B2,1, ... + eB_B2, 2...	2, 3	Analog-Input 2 14…445 Dig. = 0,51 … 14,2V	... + eB_W1, ...

Analog Output x

		AOV13	AOV12	AOV11	AOV10	AOV9	AOV8
Bit 15							Bit 8

AOV7	AOV6	AOV5	AOV4	AOV3	AOV2	AOV1	AOV0
Bit 7							Bit 0

Bit 13-0 ..... AOV<13:0>: Analog Output Value (Little Endian)
11 1111 1111 1111 = 16383 (output PWM with 100%)
…
00 0000 0000 0000 =0 (output PWM with 0%)

Relay Control

-	-	-			DIR	Rel2	Rel1
Bit 7							Bit 0

Bit 2 ..... DIR: change Direction
1 = activated
0 = deactivated
Bit 1 ..... Rel2: Relay 2 control
1 = activated
0 = deactivated
Bit 0 ..... Rel1: Relay 1 control
1 = activated
0 = deactivated

Analog Input x:

-	-	-	-	-	-	AIV9	AIV8
Bit 15							Bit 8

AIV7	AIV6	AIV5	AIV4	AIV3	AIV2	AIV1	AIV0
Bit 7							Bit 0

Bit 9-0 ..... AIV<9:0>: Analog Input Value (Little Endian)
11 1111 1111 = Analog Input Value: 1023
…
00 0000 0000 = Analog Input Value: 0

5.4.10.8 Programming Note

Beside the notes in chapter **4**, please regard the following these:

none

5.4.11 **P-pHTmpAoDAioImp-0#**

1x pH-Input, 2-wire
1x Temperature, KTY2K, 2-wire
1x Analog Output, 0-20mA, 2/3-wire
1x Analog Input, 10V/20mA, 2/3-wire
1x Pulse-In-/Output, n/p-switch, 2/3-wire
can be used also as a Digital-Input

Modul ID	**5-603, 5-604**			
Order No.	**CAE_P-pHTmpAoDAioImp-0#**			
Terminal	**push-in** (for ≤ 0.5mm²)	Core	**M24C**	
Size	**5 eU** (55mm x 72mm)	BB_{FCP}	**1-1-1**	
Variants 0# =	**01:** AIn 0/4..20mA (5-603) **02:** AIn 0..10V (5-604)			

5.4.11.1 Brief Description

5.4.11.2 Connectors and Indication-/Operation-Elements

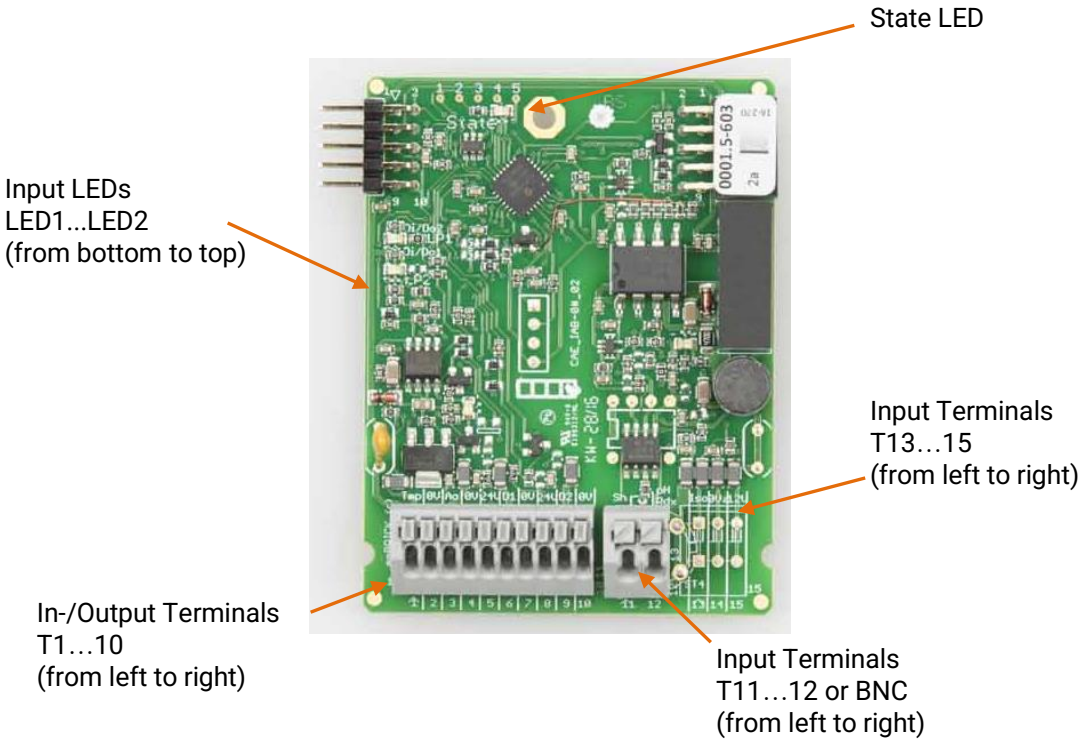

5.4.11.3 Terminal Assignment

Circuit Example	Ident.	Ter.	Function	Usage	internal simplified diagram
	Tmp	**1**	Temp.-Input 1	Sensor KTY81-2k	
	0V	**2**		GND	
	AO	**3**	Analog-Output 1	Output	
	0V	**4**		GND	
	24V	**5**	Analog-Input 1 (with supply)	+24V (Supply.)	
	D1	**6**		Input	
	0V	**7**		GND	
	24V	**8**	puls-Input 1 (with supply) bzw. Imp.-Ausg.1 [1)]	+24V (Supply)	
	D2	**9**		Input (Output)	
	0V	**10**		GND	
	PE	**11**	pH Input Input 1	shield	
	pH	**12**		Sensor-Input	
	Iso	**13**	Iso Input (only 5-607 + 5-608)	Input	
	0V	**14**		Shield	
	12V	**15**		GND	

5.4.11.4 LED Indications

LED1...2 ..... status indication of the inputs I1..2
Status-LED ..... module status (see **Fehler! Verweisquelle konnte nicht gefunden werden.**)

5.4.11.5 Application Note

In addition to the notes in chapter **4**, please regard the following:

- Make sure that the GND of the analog signals is connected to the 0V clamp. Otherwise the measurement will reduce precision.
- For chattering switching contacts on slow frequencies, the configurable filter should be used. On higher frequencies the filter isn't available; therefore a semiconductor contact is recommended.
- The switch for n/p switching at the pulse IOs is next to the Input LEDs [LED1 + LED2]. When the solder bridge is closed the pull up and the LEDs are activated.
- For the pH input are push-in terminals as standard mounted, a BNC is optional available.

5.4.11.6 Technical Data

Input/Output:

Number of analog inputs 1
Connection technology ..... 2/3-wire (supports sensor power supply)
for 5-603:
Type ..... current
Input range ..... nom. 0...20mA (full ADC approx. 0...23.3mA, max. 30mA)
Input resistance ..... approx. 175Ohm
for 5-603
Type ..... voltage
Input range ..... nom. 0...10V (full ADC approx. 0...10,5V, max. 15)
Input resistance ..... approx. 100kOhm
Resolution ..... 10 Bit, 0.1%
Linearity..... 0.2%
Accuracy 0.5%
Filter..... hardware, 1st order, $f_{cut\ off}$ = approx. 100Hz

Number of temperature inputs.. 1
Connection technology 2-wire
Type..... KTY81-2k
Input range ..... nom. -10...50°C (full ADC approx. - 15...55°C)
Measure current ..... approx. 0.6mA
Resolution ..... 10 Bit, 0.1%
Linearity..... 0.2%
Accuracy 0.5%
Filter..... hardware, 1st order, $f_{cut\ off}$ = approx. 100Hz

Number of pH inputs..... 1
- range ..... 0 … 7 … 14 pH (420mV ... 0V ... 420mV)
- type ..... single-rod measuring cell

Output analog
- quantity 1
- range ..... 0/4 to 20mA
- absolute maximum ratings .... approx. 30mA

Others:

Bus power consumption..... sensor supply + analog Output + 5mA@24V, <20mA@3.3V
Isolation buses to I/O..... none (important details: consider to chapter **4**)
Status indication ..... LEDs for each input, output and for the module status

Mechanics:

Terminals ..... 1 x 13, cage clamp Wago250
Connection..... usable with one litz wire from 0.2 – 0.5 mm²
Dimensions ..... 44 x 72 x 20 mm
Weight ..... approx. 40g

Options:

Plug-in terminals ..... optional available

5.4.11.7 Process Data Image

Out-Userdata **from** Master to Slave total: 10 Bytes			**In**-Userdata **to** Master from Slave total: 11 Bytes		
Byte	Function	rC Assign...	Byte	Function	rC Assign...
0, 1	Analog-Output 1 0...12900 Dig. ≡ 0...20.0 mA	... + eB_W0, 0, ...	0, 1	Analog Input 1 (pH Input) 130..512..894 Dig. ≡ 0..7..14pH assignment see below	... + eB_W0, 0, ...
2, 3	Not used	... + eB_W1, 0, ...	2, 3	Analog Input 2 (Temp) 205...970 Dig. ≡ 0...50 °C ≡ 1630 und 2417 Ohm	... + eB_W1, 0, ...
4, 5	not used		4, 5	Analog-Input 3 0...894 Dig. ≡ 0...20 mA bzw. 0...933 Dig. ≡ 0...10 V	... + eB_W2, 0, ...
6, 7	Pulse Input Control 1 usage see below.	... + eB_W3, 0, ...	6, 7	Puls Input Sum 1 usage see below	... + eB_W3, 0, ...
8, 9	Pulse Input Attribute 1 usage see below.	... + eB_W4, 0, ...	8, 9	Puls Input Difference 1 usage see below.	... + eB_W4, 0, ...
10	Digital Output		10	Input Image Bit 0 = dig. status of analog input1 Bit 1 = dig. status of counter	... + eB_B10, 0, ... + eB_B10, 1, ...

Analog Output 1

-	-	AOV13	AOV12	AOV11	AOV10	AOV9	AOV8
Bit 15							Bit 8

AOV7	AOV6	AOV5	AOV4	AOV3	AOV2	AOV1	AOV0
Bit 7							Bit 0

Bit 9-0 ..... AOV<9:0>: Analog Output Value (Little Endian)
11 0010 0110 0100 = 12900 (output 20mA)
...
00 0000 0000 0000 = 0 (output 0mA)

Pulse Input Control x

MODE5	MODE4	MODE3	MODE2	MODE1	MODE0	MSET9	MSET8
Bit 15							Bit 8

MSET7	MSET6	MSET5	MSET4	MSET3	MSET2	MSET1	MSET0
Bit 7							Bit 0

Bit 15-10 ..... MODE<4:0>: Pulse Input operating Mode
110010 = Mode Period Duration with Time Grid 50ms
110001 = Mode Period Duration with Time Grid 49ms
…
000010 = Mode Period Duration with Time Grid 2ms
000001 = Mode Period Duration with Time Grid 1ms
000000 = Mode Fixed Gate Time

Bit 9-0 ..... MSET<9:0>: Mode Settings
in Mode “Period Duration”: Filter Period in ms, to filter out contact chattering (Little Endian):
11 1111 1111 = Filter Period 1023ms
…
00 0000 0000 = Filter Period 0ms
in Mode “Fixed Gate Time”:
Mode Settings has no effect

Pulse Input Attribute x

ATTR15	ATTR14	ATTR13	ATTR12	ATTR11	ATTR10	ATTR9	ATTR8
Bit 15							Bit 8

ATTR7	ATTR6	ATTR5	ATTR4	ATTR3	ATTR2	ATTR1	ATTR0
Bit 7							Bit 0

Bit 15-0: ..... ATTR<15:0>: Additional Pulse Input Attributes
in Mode “Period Duration”: Timeout for 0-setting (Little Endian):
1111 1111 1111 1111 = 65535 * Time Grid
…
0000 0000 0000 0000 = 0
in Mode “Fixed Gate Time”: Gate Time in ms (Little Endian):
1111 1111 1111 1111 = 65535ms
…
0000 0000 0000 0000 = 0ms

Analog Input x

-	-	-	-	-	-	AIV9	AIV8
Bit 15							Bit 8

AIV7	AIV6	AIV5	AIV4	AIV3	AIV2	AIV1	AIV0
Bit 7							Bit 0

Bit 9-0 ..... AIV<9:0>: Analog Input Value (Little Endian)
11 1111 1111 = Analog Input Value: 1023
…
00 0000 0000 = Analog Input Value: 0

Pulse Input Sum x

TR1	TR0	PISV13	PISV12	PISV11	PISV10	PISV9	PISV8
Bit 15							Bit 8

PISV7	PISV6	PISV5	PISV4	PISV3	PISV2	PISV1	PISV0
Bit 7							Bit 0

Bit 15-14..... TR<1:0>: Time Reference; 2 Bit Counter that counts up every millisecond. Can be used to compensate the clock deviation of the *emBRICK®*-module.

Bit 13-0 ..... Pulse Input Sum Value; Increments on falling edge; Resets to zero on overflow (Little Endian):
11 1111 1111 1111 = 16383
…
00 0000 0000 0000 = 0

Pulse Input Difference x

PIDV15	PIDV14	PIDV13	PIDV12	PIDV11	PIDV10	PIDV9	PIDV8
Bit 15							Bit 8

PIDV7	PIDV6	PIDV5	PIDV4	PIDV3	PIDV2	PIDV1	PIDV0
Bit 7							Bit 0

Bit 15-0 ..... PIDV<15:0>: Pulse Input Difference Value
in Mode “Fixed Gate Time”:
Displays all fallen edges monitored in the timeframe defined in Pulse Input Attribute x

5.4.11.8 Programming Note

In addition to the notes in chapter **4**, please regard the following:

- To stabilize the measurement result, they should be filtered in the application

5.4.12 **P-RdxTmpAoDAioImp-0#**

1x Redox-Input, 2-wire
1x Temperature, KTY2K, 2-wire
1x Analog Output, 0-20mA, 2/3-wire
1x Analog Input, 10V/20mA, 2/3-wire
1x Pulse-In-/Output, n/p-switch, 2/3-wire
can be used also as a Digital-Input

Modul ID	**5-611, 5-606**			
Order No.	**CAE_P-RdxTmpAoDAioImp-0#**			
Terminal	**push-in** (for ≤ 0.5mm²)	Core	**M24C**	
Size	**5 eU** (55mm x 72mm)	BB_{FCP}	**1-1-1**	
Variants 0# =	**01:** AIn 0/4..20mA (5-611) **02:** AIn 0..10V (5-606)			

5.4.12.1 Brief Description

This module use the same terminals like the P-pHTmpAoDAioImp. For more details see it's description.

5.4.12.2 Process Data Image

This module use the same process data image like the P-pHTmpAoDAioImp, except the *Analog Input 1* range.

Out-Userdata **from** Master to Slave total: 10 Bytes			**In**-Userdata **to** Master from Slave total: 11 Bytes		
Byte	Function	rC Assign...	Byte	Function	rC Assign...
0, 1	Analog-Output 1 0...12900 Dig. ≡ 0...20.0 mA	... + eB_W0, 0, ...	0, 1	Analog Input 1 (Rdx Input) 117..512..907 Dig. ≡ -2000..0..2000mV assignment see below	... + eB_W0, 0, ...

5.4.13 P-IsoTmpAoDAioImp-0#

1x Current-Input, isol., 3-wire
1x Temperature, KTY2K, 2-wire
1x Analog Output, 0-20mA, 2/3-wire
1x Analog Input, 10V/20mA, 2/3-wire
1x Pulse-In-/Output, n/p-switch, 2/3-wire
can be used also as a Digital-Input

Modul ID	**5-607, 5-608**			
Order No.	**CAE_P-IsoTmpAoDAioImp-0#**			
Terminal	**push-in** (for ≤ 0.5mm²)	Core	**M24C**	
Size	**5 eU** (55mm x 72mm)	BB_{FCP}	**1-1-1**	
Variants 0# =	**01:** AIn 0/4..20mA (5-607) **02:** AIn 0..10V (5-608)			

5.4.13.1 Brief Description

Offers a 0/4 ... 20mA current input, fully galvanic isolated for operation of e.g. sensors. It also supports a power supply of 12V, 25mA for the external source.

5.4.13.2 Brief Description

This module uses the same terminals like the P-pHTmpAoDAioImp. For more details see it's description.

5.4.13.3 Process Data Image

This module uses the same process data image like the P-pHTmpAoDAioImp, except the *Analog Input 1* range.

Out-Userdata **from** Master to Slave total: 10 Bytes			**In**-Userdata **to** Master from Slave total: 11 Bytes		
Byte	Function	rC Assign...	Byte	Function	rC Assign...
0, 1	Analog-Output 1 0...12900 Dig. ≡ 0...20.0 mA	... + eB_W0, 0, ...	0, 1	Analog Input 1 (Rdx Input) 117..512..907 Dig. ≡ -2000..0..2000mV assignment see below	... + eB_W0, 0, ...

5.4.14 P-UlcTmpAoDAioImp-0#

1x Voltage-Input, isol., 2-wire
1x Temperature, KTY2K, 2-wire
1x Analog Output, 0-20mA, 2/3-wire
1x Analog Input, 10V/20mA, 2/3-wire
1x pulse-In-/Output, n/p-switch, 2/3-wire
can be used also as a Digital-Input

Modul ID	**5-609, 5-610**			
Order No.	**CAE_P-UlcTmpAoDAioImp-0#**			
Terminal	**push-in** (for ≤ 0.5mm²)	Core	**M24C**	
Size	**5 eU** (55mm x 72mm)	BB_{FCP}	**1-1-1**	
Variants 0# =	**01:** AIn 0/4..20mA (5-609) **02:** AIn 0..10V (5-610)			

5.4.14.1 Brief Description

Offers a 0 ... 300mV ultra low current voltage input, fully galvanic isolated for operation of e.g. with chemical probes. The assignment is 0 ... 300mV => 30...980 digits.

This Modul use the same terminals like the P-pHTmpAoDAioImp do.

5.5 CAE T Bricks (Testing)

This contains modules for testing and high performance measuring applications like required for R&D, EOL test benches , HIL test benches.

Key features are:

- resolution ≥ 14 Bit
- accuracy ≤ 0.1 %
- sample rate ≥ 1 kS/s with on-brick preprocessing
- mechanical standard format for easy mounting into a 19" Rack
- adaption via standard connectors (not only clamps)

5.5.1 T-4Di4Do-01

4x Digital-Outputs
high side switch, low side switch,
pull-up, 10V-24V nom. Abs. max = 30V
4x Digital-Inputs, 0-24V,
programmable threshold, OVP 50V
duty cycle measurement

Module ID	**6-101**			
Order No.	**CAE_T-4Di4Do-01**			
Terminals	**25 Pin Sub-D (m)**	Core	**M25A**	
Size	**6 eT** (66mm x 107,5mm)	BB_{FCP}	**3-1-1**	
Variants 0# =	**-**			

5.5.1.1 Brief Description

The Module includes four digital outputs, adjustable as low side switch or high side switch, optional with pull-up.

The digital inputs designed for nominal 0-24V. The threshold of all inputs together can programmed from about 1V to 24V.

5.5.1.2 Connectors and Indication-Operation-Elements

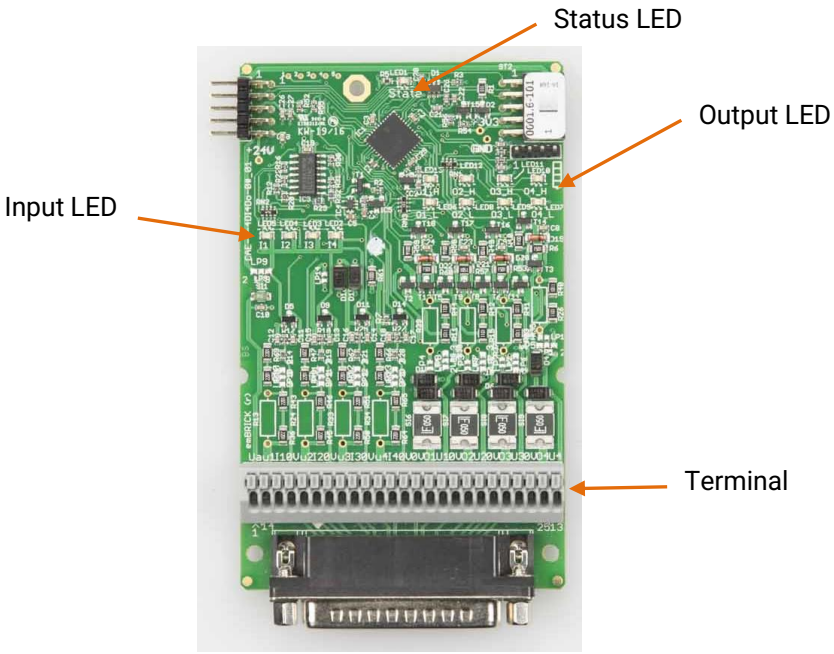

5.5.1.3 Terminal Assignment

Circuit Example	Ident.	Ter.	Function	Usage	internal simplified diagram
	(left terminal side				
	Ua	**1**	aux supply 3.3/24	supply output	
	u1	**14**	Input 1	input supply	
	I1	**2**		switching input	
	0V	**15**		GND	
	u2	**3**	Input 2	input supply	
	I2	**16**		switching input	
	0V	**4**		GND	
	u3	**17**	Input 3	input supply	
	I3	**5**		switching input	
	0V	**18**		GND	
	u4	**6**	Input 4	input supply	
	I4	**19**		switching input	
	0V	**7**		GND	
	0V	**20**	Output 1	GND	
	O1	**8**		switching output	
	U1	**21**		output supply	
	0V	**9**	Output 2	GND	
	O2	**22**		switching output	
	U2	**10**		output supply	
	0V	**23**	Output 3	GND	
	O3	**11**		switching output	
	U3	**24**		output supply	
	0V	**12**	Output 4	GND	
	O4	**25**		switching output	
	U4	**13**		output supply	
	(right terminal side)				

5.5.1.4 LED Indications

LED I1 –I4	*status indications inputs I1 – I4 are lit when input is low*
LED O1_L – O4_L	*status indications outputs low-side O1 – O4*
LED O1_H – O4_H	*status indications outputs high-side O1 – O4*
Status LED	module status (see **Fehler! Verweisquelle konnte nicht gefunden werden.**)

5.5.1.5 Application Note

In addition to the notes in chapter **4**, please regard the following:

- none

5.5.1.6 Technical Data

Inputs:

Number of digital inputs 4
Type ..... voltage
Input range ..... nom. 0...24V (full approx. 25V , max. 50V permanent)
Input resistance ..... approx. 100kOhm
Input frequency ..... max. 50 kHz
Filter ..... none
Threshold ..... programmable about 1V to 25V for all inputs
Resolution ..... 10 Bit, 0.1%

- auch für PWM-In (auch für Capture einsetzbar, hier mit internem 16 MHz Takt und einer Auflösung von besser 100ns)
- PWM/Digital In Komparator via LM139D
- Schaltschwelle einstellbar mit U threshold, die über einen PWM erzeugt wird
- Pull-up, Pull-Down und zus. R als Vorwiderstand über Jumper. Default. Pull-Down

Outputs:

Number of digital outputs 4
Type ..... high-side switch (mit FET FDN360P)
Type ..... low-side switch (FET PMV45EN)
Type Selection ..... via solder bridge
Output 1, 2 ..... also as PWM-Output
PWM max Frequency ..... 2 kHz
PWM min Frequency ..... 2 Hz

PWM typ resolution 9Bit, 0.2%
Currect ..... max. 0.5A, no short circuit protected
PWM Thershold .....

5.5.1.7 Process Data Image

Out-Userdata **from** Master to Slave total: 16 Bytes			**In**-Userdata **to** Master from Slave total: 8 Bytes		
Byte	Function	rC Assign...	Byte	Function	rC Assign...
0	Output-State Bit 0...3 ≡ Out High 1..4 Bit 4…7 ≡ Out. Low 1..4	... + eB_B0, 0, 0, ...	0	Input-State Bit 0...3 ≡ In 0..3	... + eB_B0, 0, ...
1	Output Mode Bit 0, 1 ≡ enable PWM1/2 Bit 2, 3 ≡ PWM1/2 Mode Bit 4..5 ≡ PWM Output Prescaler	... + eB_B1, 0, 0, ...	1	reserved	
2, 3	PWM Value Output 1 24000 ≡ 100%	... + eB_W1, 0, ...	2,3	Threshold Voltage 0..1024 ≡ 0…2.50V	…+ eB_W1, 0, …
4, 5	PWM Value Output 2 24000 ≡ 100%	... + eB_W2, 0, ...	4, 5	Capture Value Input 1 xxx ≡ 0...100 %	... + eB_W2, 0, ...
6, 7	PWM Cycle Output usage see below	... + eB_W3, 0, ...	6, 7	Capture Value Input 2 xxx ≡ 0...100 %	... + eB_W3, 0, ...
8, 9	Input Threshold usage see below	... + eB_W4, 0, ...			
10, 11	Duty Input Control 1 usage see below	... + eB_W5, 0, ...			
12, 13	Duty Input Control 2 usage see below	... + eB_W6, 0, ...			
14, 15		... + eB_W7, 0, ...			

Output State

DO-H4	DO-H3	DO-H2	DO-H1	DO-L4	DO-L3	DO-L2	DO-L1
Bit 7							Bit 0

Bit 7-4 ..... DO-HX<7:4>: Set Output X High-side
1 = Close high-side Switch to Output X
0 = Open high-side Switch to Output X

Bit 3-0 ..... DO-LX<3:0>: Set Output X Low-side
1 = Close low-side Switch to Output X
0 = Open low-side Switch to Output X

Output Mode

-	-	PS1	PS0	PWM-2 H	PWM-1 H	MDO1	MDO0
Bit 7							Bit 0

Bit 5, 4..... PS <5:4> Prescaler of PWM1 and PWM0
11 = 256
10 = 64
01 = 8
00 = 1

PS	Prescaler value	Period [us]	Resolution
0	1	0.0625	16bit
1	8	0.5	16bit
2	64	4	16bit
3	256	16	16bit

Bit 3, 2..... PWM-X Mode <3:2>
0 = PWM-X Output is on low side Switch
1 = PWM-X Output is on high side Switch

Bit 1, 0..... Mode DO <1:0>
0 = digital output, controlled by Out State
1 = PWM Output

PWM Value Output 1/2

-	AOV14	AOV13	AOV12	AOV11	AOV10	AOV9	AOV8
Bit 15							Bit 8

AOV7	AOV6	AOV5	AOV4	AOV3	AOV2	AOV1	AOV0
Bit 7							Bit 0

Bit 15-0 ..... AOV<14:0>: PWM Output Value (Little Endian)
101 1101 1100 0000 = 24000 (output PWM with 100%)
…
000 0000 0000 0000 =0 (output PWM with 0%)

PWM Cycle Output

-	AOV14	AOV13	AOV12	AOV11	AOV10	AOV9	AOV8
Bit 15							Bit 8

AOV7	AOV6	AOV5	AOV4	AOV3	AOV2	AOV1	AOV0
Bit 7							Bit 0

Bit 15-0 ..... AOV<14:0>: PWM Output Value (Little Endian)
101 1101 1100 0000 = 24000 * Prescaler (Periode) (max period time)
…
000 0000 0000 0000 =OFF

Input Threshold

-	AOV14	AOV13	AOV12	AOV11	AOV10	AOV9	AOV8
Bit 15							Bit 8

AOV7	AOV6	AOV5	AOV4	AOV3	AOV2	AOV1	AOV0
Bit 7							Bit 0

Bit 14-0 ..... AOV<14:0>: Analog Output Value (Little Endian)
101 1101 1100 0000 = 24000 ≡ 3,3V

…
000 0000 0000 0000 = 0 (0 V)

Duty Input Control 1/2

TOD7	TOD6	TOD5	TOD4	TOD3	TOD2	TOD1	TOD0
Bit 15							Bit 8

-	-	-	-	-	-	PS1	PS0
Bit 7							Bit 0

Bit 15-8 ..... TOD<7:0>: Timeout definition:
1111 1111 = 255 * Prescaler * 1ms
…
0000 0001 = 1 * Prescaler * 1ms
0000 0000 = Timeout deactivated

Bit 1-0 ..... PS<1:0>: Prescaler (see Table below):
11 = 256
10 = 64
01 = 8
00 = 1

PS	Prescaler value	Period [ms]	Accuracy [us]	Resolution
0	1	4.096	0.0625	16bit
1	8	32.768	0.5	16bit
2	64	262.144	4	16bit
3	256	2.097.152	16	16bit

Input State

TR1	TR0	-	-	DI3	DI2	DI1	DI0
Bit 7							Bit 0

Bit 7-6 ..... TR<1:0>: Time Reference:
2 Bit Counter that counts up every millisecond. Can be used to compensate the clock deviation of the *emBRICK®*-module.

Bit 3-0 ..... DI<3:0>: Digital Inputs:
actual digital status of the duty inputs 1..4
1 = Input is HIGH
0 = Input is LOW

Voltage Threshold

-	-	-	-	-	-	AIV 9	AIV 8
Bit 15							Bit 8

AIV 7	AIV 6	AIV 5	AIV 4	AIV 3	AIV 2	AIV 1	AIV 0
Bit 7							Bit 0

Bit 7-0 ..... AIV<9:0>: Analog Input Value
11 1111 1111= 1024 (2.5V)
…
00 0000 0000 = 0 (0 V)

Capture Value Input 1/2

DIV15	DIV14	DIV13	DIV12	DIV11	DIV10	DIV9	DIV8
Bit 15							Bit 8

DIV7	DIV6	DIV5	DIV4	DIV3	DIV2	DIV1	DIV0
Bit 7							Bit 0

Bit 15-0 ..... Duty Input Value: measured High-Time in Timer Ticks (see Prescaler)
1111 1111 1111 1111 = High Time of Pulse is higher than adjusted Period
1111 1111 1111 1110 = High Time of Pulse: 65534 ticks
…
0000 0000 0000 0001 = High Time of Pulse: 1 tick
0000 0000 0000 0000 = No start slope detected within the timeout

5.5.1.8 Programming Note

In addition to the notes in chapter **4**, please regard the following:

- After every communication all inputs will be updated
- To stabilize the messurement results, they should be filtered in the application
- The is no way to closed DO-HX an DO-LX at the same time

5.5.2 T-4Ai4Ao-0#

4x Analog-Inputs (using ADS8684)
16 Bit, single/diff. input, filtered
Full-Range: ±10.24V
others on request
4x Analog-Outputs (using DAC7565)
12 Bit, Full Range: 36V, up to ±100mA

Module ID	**6-401, 6-402,** 6-411, 6-412			
Order No.	**CAE_T-4Ai4Ao-##**			
Terminals	**Sub-D (m) / push-in**	Core	**M25E**	
Size	**6 eT** (66mm x 107,5mm)	BB_{FCP}	**3-1-1**	
Variants 0# =	-01 Ai ±10V, Ao 0..36V -02 AI ±50V, Ao 0..36V -11 Ai ±10V, Ao 0..24V, with AO Sensor -12 AI ±50V, Ao 0..24V, with AO Sensor			

5.5.2.1 Brief Description

The T-4Ai4Ao-0# are high performance analog interfaces for testing and accurate measurement applications. They contain a separate processor to realize a pre-evaluation or an arbitrary generation. Each analog output can deliver up to 100mA, may be there is an external cooling system required.
The IOs, can be adapted via Sub-D connector or push-in clamps. Key features are:
AI:

- 16 Bit ADC, R_I = 1MOhm, <10 kS/s
- full range max Value ±10,24V
- no separate active components in the signal path (low noise/errors)

AO:

- 12 Bit DAC, U_{Out} <36V (ext. supply), slew-rate 5V/µs, <10 kS/s
- I_{Out} < 100mA, Push-Pull (with external negative supply)

5.5.2.2 Connectors and Indication-Operation-Elements

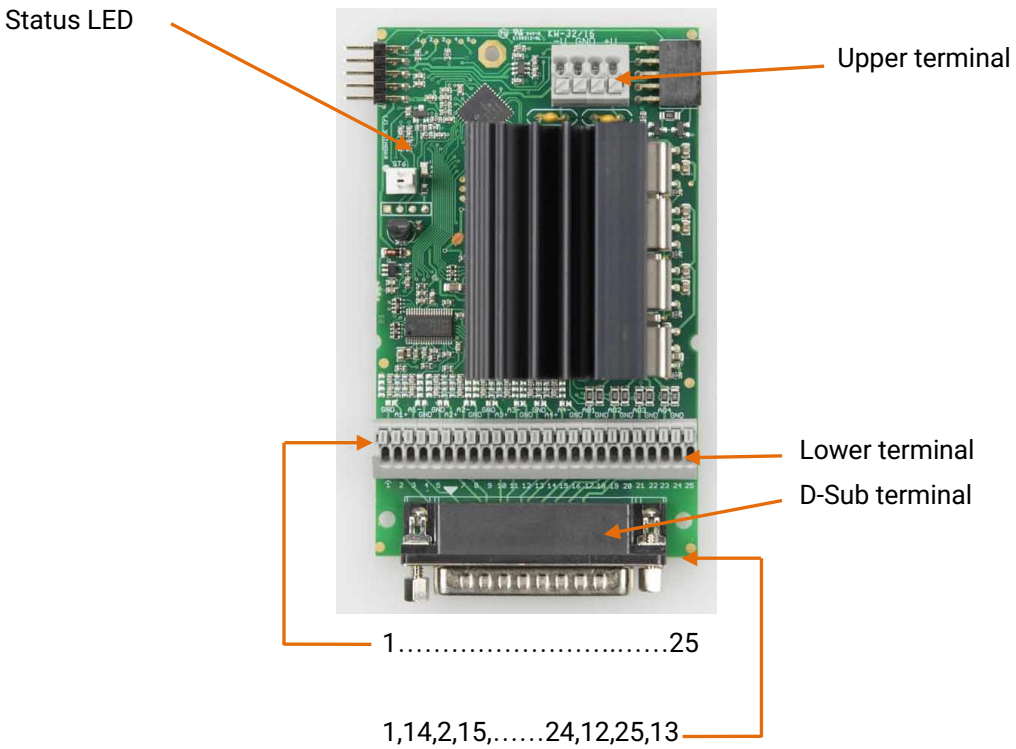

5.5.2.3 Terminal Assignment

D-Sub Terminal

Circuit Example	Ident.	Ter.	Function	Usage	internal simplified diagram
	AI-GND	1	GND	Ai GND	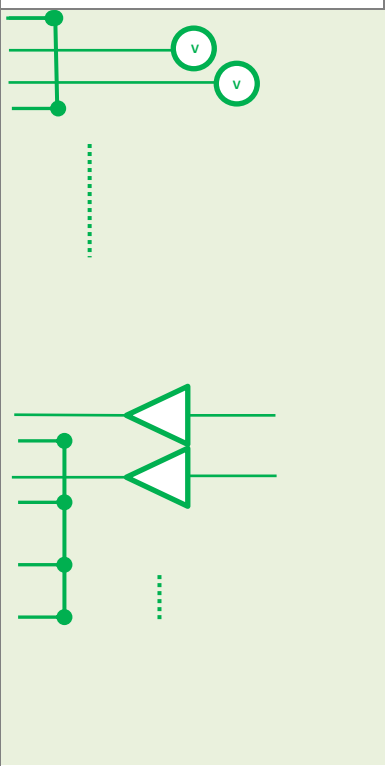
	In1+	14	Input 1	Input +	
	In1-	2		Input -	
	Ai-GND	15		Ai GND	
	In2+	3	Input 2	Input +	
	In2-	16		Input -	
	Ai-GND	4		Ai GND	
	In3+	17	Input 3	Input +	
	In3-	5		Input -	
	Ai-GND	18		Ai GND	
	In4+	6	Input 4	Input +	
	In4-	19		Input -	
	AiI-GND	7		Ai GND	
	Ao1	20	Output 1	Output	
	Ao-GND	8		Ao-GND	
	Ao2	21	Output 2	Output	
	Ao-GND	9		Ao-GND	
	Ao3	22	Output 3	Output	
	Ao-GND	10		Ao-GND	
	Ao4	23	Output 4	Output	
	Ao-GND	11		Ao-GND	
	nc	24	Nc	Leave open	
	-USUP	12	Negitive Supply	Alterative Supply for AO	
	Ao-GND	25	GND		
	+USUP	13	Positive Supply		

Push- in Terminals

Circuit Example	Ident.	Ter.	Function	Usage	internal simplified diagram
	U-	1	Negitive Supply	Supply for AO	
	GND	2	GND	Supply for AO	
	GND	3	GND	Supply for AO	
	U+	4	Positive Supply	Supply for AO	
	Upper terminal (right terminal side)				
	Lower terminal (left terminal side)				
	AI-GND	1	GND	Ai GND	
	In1+	2	Input 1	Input +	
	In1-	3		Input -	
	Ai-GND	4		Ai GND	
	AI-GND	5	Input 2	AI-GND	
	In2+	6		Input +	
	In2-	7		Input -	
	AI-GND	8		AI GND	
	AI-GND	9	Input 3	AI-GND	
	In3+	10		Input +	
	In3-	11		Input -	
	Ai-GND	12		Ai GND	
	AI-GND	13	Input 4	AI-GND	
	In4+	14		Input +	
	In4-	15		Input -	
	AiI-GND	16		Ai GND	
	Ao1	17	Output 1	Output	
	Ao-GND	18		Ao-GND	
	Ao2	19	Output 2	Output	
	Ao-GND	20		Ao-GND	
	Ao3	21	Output 3	Output	
	Ao-GND	22		Ao-GND	
	Ao4	23	Output 4	Output	
	Ao-GND	24		Ao-GND	
	nc	25	Nc	Leave open	
	(right terminal side)				

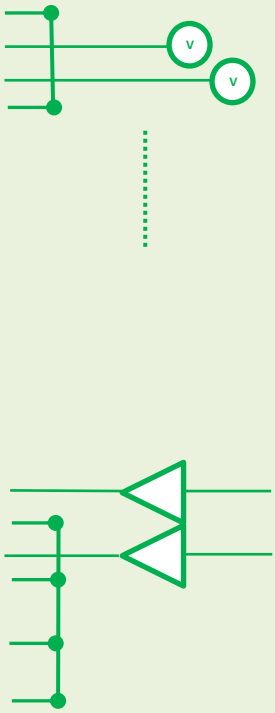

5.5.2.4 LED Indications

Status LED module status (see **Fehler! Verweisquelle konnte nicht gefunden werden.**)

5.5.2.5 Application Note

In addition to the notes in chapter **4**, please regard the following:

- the boards has a common ground with different GND-paths (but no galvanic isolation)
- for output-current > 25mA per Channel, an external heatsink system is necessary
- Attention: The heatsink can reach temperatures from >60°C! In this case prepare them, so that it can't be touch!
- When the heatsink temp will reach 110°C the module sets all outputs to 0V, all loads should between the output and GND. This is also the state when the module is not initialized.
- Attention: The Analog Input Channels must be calibrated.

5.5.2.6 Technical Data

Inputs:

Number of analog inputs 4
Type ..... voltage/current
Input range ..... nom. 0...10,25V (full approx. 15V, max. 50V at Variant -02)
Input resistance ..... approx. 100kOhm
Filter ..... programmable
Resolution ..... 16 Bit

Outputs:

Number of analog outputs..... 4
Range, nominal ..... 0…36V (or up to external Supply Voltage - 5V)
Maximum current ..... 100mA per Channel

Thermal management of the Outputs:

heat sink $R_{(th)}$..... 4,7K/W
max. allowed temperature..... 100°C (internal measurement Temp heatsink)

Power:

Supply Voltage..... 0…42V
supply Voltage need to cross 10 to 14V in about 4ms

Negative Supply..... -5V @ 0.5A
negative Voltage need to cross 0 to -4V in about 4ms

5.5.2.7 Process Data Image

Out-Userdata **from** Master to Slave total: 20 Bytes			**In**-Userdata **to** Master from Slave total: 20 Bytes		
Byte	Function	rC Assign...	Byte	Function	rC Assign...
0	Input Mode Bit 0 - 4 Page Bit 5 - 8 Mode See below	... + eB_B0, 0, 0, ...	0	Page	... + eB_B0, 0, 0, ...
1	Input Counter 0…255	... + eB_B1, 0, ...	1	Output counter 0…255	... + eB_B1, 0, ...
2, 3	Analog Output 1 0…3607 ≡ 0…40V	... + eB_W1, 0, ...	2, 3	External Supply Voltage 0…58875 ≡ 0…48V	... + eB_W1, 0, ...
4, 5	Analog Output 2 0…3607 ≡ 0…40V	... + eB_W2, 0, ...	4, 5	Analog Input 1 -25600 … 25600 ≈ -10V … 10V -25600 … 25600 ≈ -40V … 40V	... + eB_W2, 0, ...
6, 7	Analog Output 3 0…3607 ≡ 0…40V	... + eB_W3, 0, ...	6, 7	Analog Input 2 -25600 … 25600 ≈ -10V … 10V -25600 … 25600 ≈ -40V … 40V	... + eB_W3, 0, ...
8, 9	Analog Output 4 0…3607 ≡ 0…40V	... + eB_W4, 0, ...	8, 9	Analog Input 3 -25600 … 25600 ≈ -10V … 10V -25600 … 25600 ≈ -40V … 40V	... + eB_W4, 0, ...
10, 11	Reserve	... + eB_W5, 0, ...	10, 11	Analog Input 4 -25600 … 25600 ≈ -10V … 10V -25600 … 25600 ≈ -40V … 40V	... + eB_W5, 0, ...
12, 13	Reserve	... + eB_W6, 0, ...	12, 13	Temp Heatsink See below	... + eB_W6, 0, ...
14, 15	Reserve	... + eB_W7, 0, ...	14, 15	Temp PCB See below	... + eB_W7, 0, ...
16, 17	Reserve	... + eB_W8, 0, ...	16, 17	24V Supply	... + eB_W8, 0, ...

				See below	
18, 19	Reserve	... + eB_W9, 0, ...	18, 19	3.3V Supply See below	... + eB_W9, 0, ...

Input Mode

Mode3	Mode2	Mode1	Mode0	PA3	PA2	PA1	PA0
Bit 7							Bit 0

Bit 7-4 ..... Mode<4:0>: Operation Mode (Little Endian)
0000 = 0 Easy Mode
..... further Modes under Development

Bit 3-0 ..... Page<4:0>: Switching Pages for advanced measuring modes
0000 = Page 0
...
1111 = Page 16
Not used under Development

Input Counter

INC7	INC6	INC5	INC4	INC3	INC2	INC1	INC0
Bit 7							Bit 0

Bit 7-0 ..... INC<7:0>: Counter Input for multiple Pages(Little Endian)
0000 0000 = 0 Easy Mode
Not used under Development

Analog Output

-	-	AOV13	AOV12	AOV11	AOV10	AOV9	AOV8
Bit 15							Bit 8

AOV7	AOV6	AOV5	AOV4	AOV3	AOV2	AOV1	AOV0
Bit 7							Bit 0

Bit 9-0 ..... AOV<9:0>: Analog Output Value (Little Endian)
1111 1011 1111 = 4031 = 40V
...
0000 0000 0000 = 0 = 0V

Page

RST	-	-	-	PA3	PA2	PA1	PA0
Bit 7							Bit 0

Bit 7 ..... RST: Reset internal communication on change from 0 to 1

Bit 3-0 ..... Page<3:0>: Switching Pages for advanced measuring modes
(not used under Development)
0000 = Page 0
...
1111 = Page 16

Output Counter

OUTC7	OUTC6	OUTC5	OUTC4	OUTC3	OUTC2	OUTC1	OUTC0

Bit 7	Bit 0

Bit 7-0 ..... OUTC<7:0>: Counter Output for multiple Pages(Little Endian)
0000 0000 = 0 Easy Mode
..... Not used under Development

Analog Input

AI15	AI14	AI13	AI12	AI11	AI10	AI9	AI8
Bit 15							Bit 8

AI7	AI6	AI5	AI4	AI3	AI2	AI1	AI0
Bit 7							Bit 0

Bit 15-0 ..... AIV<15:0>: Analog Input Value (Little Endian)
0110 0100 0000 0000 = 25600 ≈ 10V (40V)
...
0000 0000 0000 0000 = 0 = 0 V
...
1001 1100 0000 0000 = -25600 ≈ -10V (-40V)

Temp

-	-	-	-	-	-	AI9	AI8
Bit 15							Bit 8

AI7	AI6	AI5	AI4	AI3	AI2	AI1	AI0
Bit 7							Bit 0

Bit 9-0 ..... AI<9:0>: Analog Input Value (Little Endian)
10 0000 0101= 517 = 40°C
...
01 1011 0011= 435 = 0°C

24V Supply

-	-	-	-	-	-	AI9	AI8
Bit 15							Bit 8

AI7	AI6	AI5	AI4	AI3	AI2	AI1	AI0
Bit 7							Bit 0

Bit 9-0 ..... AI<9:0>: Analog Input Value (Little Endian)
11 1111 1111 = 1023 = 27,52V
...
00 0000 0000 = 0= 0V

3V3 Supply

-	-	-	-	-	-	AI9	AI8
Bit 15							Bit 8

AI7	AI6	AI5	AI4	AI3	AI2	AI1	AI0
Bit 7							Bit 0

Bit 9-0 ..... AI<9:0>: Analog Input Value (Little Endian)
11 1111 1111 = 1023 = 3,77V

…
000 0000 0000 = 0 = 0V

5.5.2.8 Programming Note

In addition to the notes in chapter **4**, please regard the following:

- After every communication all inputs will be updated
- To stabilize the measurement results, they should be filtered in the application

5.6 CAE M Bricks (Medical / Care)

prospective

Module for analytics, positioning, ...

5.7 CAE E Bricks (Education / Entertainment)

prospective

Module for evaluation, breakout, ... others..

5.7.1 E-BreakoutBoard-01

27x Digital and Analog Input and Output, CAN, USB and USART Interface

Module ID	**8-101**		
Order No.	**E_BreakoutM0-100**		
Terminals	**Pin Header**	Core	**STM32**
Size	**5 eU** (55mm x 72mm)	BB_{FCP}	**1-1-1**
Variants	**2**		
Controller	**STM32F042C6T6**		

5.7.1.1 Brief Description

Figure 1 BreakOut Modul

This module provide developers and emBRICK designer to develop their own applications based on the emBRICK bus. The breakout board is available with STM32F0 and XMC1 controller family. Variants with STM32F1 and STM32F3 are available on request. For both microcontrollers the stack is freely available. The STM32F0 emBRICK client stack is based on interrupt system and available as C-Code (CMSIS compliant). For the emBRICK family there exist a model based system called SiSy and RADCase where the stack and the application can be developed with model based engineering. The XMC1 slave code is only avaliable as model based variant (SiSy) yet.

In the delivery state a basis application is implemented where the AUX Led can be switched ON and OFF from the master.

All not used microcontroller I/Os are routed to the Breakout Connector. Below the connector there is a patch panel to place own components. Furthermore above the breakout connector there is a connector to connect a RS232, USB, RS485 or a CAN module.

The board is used for development or quick solutions, therefore no port is protected. For the patch panel the power supply is separated on the patch panel side. The 24V DC is protected by a polyfuse.

The board can also be configured into a “low cost” Master (see 5.7.1.7).

5.7.1.2 Connectors and Indication-/ Operation-Elements

Figure 2 Interfaces

5.7.1.2.1 Connector Description P111

This jumper is used to power the communication board or power the breakout board from communication board when the breakout board is not connected to the emBRICK bus. The ground of the breakout board and the communication board is connected together.

1-2	Power the communication board

2-3	Power the breakout board
Not connected	Breakout and communication board must have their own power supply

5.7.1.2.2 Connector Description P110

This jumper connects the Aux LED to Port B12

5.7.1.2.3 Connector Description P151

Selector for the boot memory. If the jumper is closed the Boot0 pin is set to 1, otherwise to 0. For detailed information refer to AN4080, AN2606 or the STM32 datasheets (e.g DocID025832) from ST Microelectronics.

5.7.1.2.4 Connector Description P155

Connector for 24VDC and Ground. This power is supplied from the master board. The 24 VDC is connected to all other emBRICK slaves. Therefore, the whole power consumption must be observed and aligned with the master max power supply. The output of the 24VDC power supply is protected with a thermal fuse.

The footprint is compatible to the WAGO 250-1402 and Phoenix Contact 1933189 with 1934861.

5.7.1.2.5 Connector Description P104

The communication connector is compatible to our USB, RS232, RS485 (half and fullduplex) and CAN boards and to myUSBtoUART (mymcu.de). These communication boards have additional protections.

Pin	µC Port	I/F
1	PB7	USART1 Rx
2	PB6	USART1 Tx
3	--	VCC
4	--	GND
5	--	GND
6	--	VCC
7	PA12	RTS, CAN Tx, USB DP
8	PA11	CTS, CAN Rx, USB DM
9	PA12	RTS, CAN Tx, USB DP
10	PA11	CTS, CAN Rx, USB DM

The pins above are also available on the P103 Breakout connector.

5.7.1.2.6 Connector Description P103

Pin	µC Port	Alternative
1	--	VCC

Pin	µC Port	Alternative
18	--	GND

2	--	VCC
3	PB1	
4	PA11	P104, CTS
5	PA12	P104, RTS
6	PB6	P104, Tx
7	PB7	P104, Rx
8	PB8	
9	PB9	
10	PB10	
11	PB11	
12	PB12	Aux LED
13	PB13	
14	PB14	
15	PB15	
16	--	GND
17	--	GND

19	--	GND
20	PB0	
21	PA15	
22	PA10	
23	PA9	
24	PA8	
25	PA7	
26	PA6	
27	PA5	R113
28	PA4	R113
29	PA3	
30	PA2	
31	PC15	
32	PC14	
33	PC13	
34	--	VCC

5.7.1.2.7 Debug Connector

The both debug connectors are parallel connected. The connectors are compatible to the em-BRICK debug connector and the Standard ARM Cortex Debug Connector in RM1.27 format.

Pin	µC Port
1	Reset
2	VCC
3	GND
4	SWDIO
5	SWClk

Pin	µC Port
1	VCC
2	SWDIO
3	GND
4	SWCLK
5	GND
6	NC
7	No Pin
8	NC
9	GND
10	Reset

5.7.1.3 Application Note

In addition to the notes in chapter 4, please regard the following:

- Each 0V and +24VDC pins on the emBRICK connectors are connected together. By using them, the module can pass the supply on to another module.

5.7.1.4 Technical Data

Note: For further global specification refer to chapter 4

Connections to the input and output pins of the microcontroller shall be comply with the STM32F042 specification.

Input:
Depends of the development

Output:
Depends of the development

Others:
Separate supply voltage ..... 24V DC ±10 % (used for output supply only)
Bus power consumption..... 0mA@24V, <20mA@3.3V (depending to the application)
Isolation Bus to I/O ..... none (important details: consider to chapter 4)
Status indication ..... LEDs for the module status

Mechanics:
Terminals ..... Wago250-1402, Phoenix Contact 1933189 & 1934861
..... Pin Header RM2.54mm
Connection..... n/a
Dimensions ..... 55 x 72 x 20 mm
Weight ..... approx. 20g

Options:
Plug-in terminals ..... optional available

5.7.1.5 AVRrocess Data Image

The emBRICK breakout board provide to develop own emBRICK slaves or develop a quick and easy small application and integrate into the emBRICK bus. The C source code is freely available for the STM32. The code is interrupt based. If model based development is preferred SiSy from myMCU.de support also this breakout board with a UML module, also RADCase. The R113 connector can be used for internal SPI CS to clear the buffer if needed. Then the R113 connector must be assembled with a zero resistor (0805). Refer to the dedicated micro controller datasheet.
In the delivery state a firmware is implemented and switch the Aux LED ON or OFF. The jumper for the AUX LED must be closed.

Out-Userdata **from** Master to Slave total: 1 Bytes			**In**-Userdata **to** Master from Slave total: 1 Bytes		
Byte	Function	rC Assign...	Byte	Function	rC Assign...
0	Digital Output 1	... + eB_B0, 0, 0, ... + eB_B0, 0, 7, ...	0	Digital State 1	... + eB_B0, 0, ... + eB_B0, 7, ...

Digital Output

--	--	--	--	--	--	--	LED1
Bit 7							Bit 0

Bit 7-0 ..... LED1: Set LED
1 = Set corresponding AUX LED ON
0 = Set corresponding AUX LED to OFF

All other Bits are ignored

Status of LED

--	--	--	--	--	--	--	LED1
Bit 7							Bit 0

Bit 7-0 ..... LED1: Status of LED
1 = corresponding AUX LED is ON
0 = corresponding AUX LED is OFF

5.7.1.6 Programming Note

In addition to the notes in chapter 4, please regard the following:

- A software generated pseudo PWM is possible till approx. 10Hz (depends on the bus/module update rate).

5.7.1.7 Master/Slave Board

The board can also configured as a low cost Master.
R111 must be assembled with a 220 Ohm resistor (0805) and the R112 with a zero resistor. The following components should be removed:

R103 required
R105 required
R104 optional
T101 optional
D101 optional
D102 optional

The optional components can be keep but for possible impact it is recommend to remove the

6. Passive Components

In addition to the boards and single electronic components, *emBRICK®* also offers well suited electromechanical components to supply a complete modular system to simply create a spefically tailored measure or control device.

This chapter contains:

Carrier Systems ..... t.b.d.
Enclosures ..... t.b.d.
Adapters, Connectors..... t.b.d.
Power Supplies ..... power supplies for brickBUS® components and actors < 1kW
Power Supplies ..... power incjetion and distribution for actors > 1kW
Power Control..... separate solutions for powering and control actors > 1kW
Sensors..... t.b.d.
Tools ..... t.b.d.

6.1 General Information

t.b.d.

6.2 Carrier Systems

Order No.	CAE_Y-CHBoc200		CAE_Y-CHBoc250
for	CAH_Boc200- ##		CAH_Boc250- ##
Useable space	In two rows max. 33eU placeable		In two rows max. 39 eU placeable
			In the upper row a power supply is mountable
Order No.	CAE_Y-CHBoc310		CAE_Y-CHBoc400
for	CAH_Boc310- ##		CAE_Y-CHBoc400-##
	In three rows 73eU placeable		In three rows max. 98 eU placeable
	In the upper row a power supply is mountable		In the upper row a power supply is mountable

6.3 Enclosures

6.3.1 Wall mounting

6.3.1.1 Bocard

All Bocard Enclosures are with holes for cable glands, the cable glands are separately available. The mainswitch CAS_Sw16-## is always included. Only the CAH_Boc400 are threaded.

6.3.1.1.1 CAH_Boc200-##

Useable space for CAH_Boc200: Inject + 14eUs + 10 eUs

Optional Parts:
- max. 3x CAH_Cg12-01
- max. 4x CAH_Cg16-01

The „##“ is a placeholder for different configurations.

6.3.1.1.2 CAH_Boc250-##

Useable space for CAH_Boc250: Inject + 17eUs + 13 eUs

Optional Parts:
- max. 6x CAH_Cg12-01
- max. 7x CAH_Cg16-01
- max. 5x CAH_Cg20-01

The „##“ is a placeholder for different configurations.

6.3.1.1.3 CAH_Boc310-##

Useable space for CAH_Boc310: Inject + 22eUs + 25 eUs + 23 eUs

Optional Parts:
- CAH_Cg12-01(max. value t.b.d.)
- CAH_Cg16-01(max. value t.b.d.)
- CAH_Cg20-01(max. value t.b.d.)
- CAS_Sw25-3p
- CAC_X-###-fc

The „##“ is a placeholder for different configurations.

6.3.1.1.4 CAH_Boc400-##

Useable space for CAH_Boc400: Inject + 30eUs + 27 eUs + 32 eUs

Optional Parts:
- CAH_Cg12-01(max. value t.b.d.)
- CAH_Cg16-01(max. value t.b.d.)
- CAH_Cg20-01(max. value t.b.d.)
- CAS_Sw25-3p
- CAC_X-###-fc

The „##“ is a placeholder for different configurations.

6.3.1.2 RCP

All RCP Enclosures are with pre-punchings in the terminal compartment, the cable glands are separately available.

The mainswitch CAS_Sw16-## is always included

6.3.1.2.1 CAH_Rcp2000-##

Useable space for CAH_Rcp2000: to be defined

Optional Parts:
- 1x CAH_Cg12-01
- 4x CAH_Cg16-01
- 1x CAH_Cg20-01

The „##“ is a placeholder for different configurations.

6.3.1.2.2 CAH_Rcp2500-##

Useable space for CAH_Rcp2500: to be defined

Optional Parts:
- 1x CAH_Cg12-01
- 5x CAH_Cg16-01
- 1x CAH_Cg20-01

The „##“ is a placeholder for different configurations.

6.3.1.3 CombiCard

The CombiCard enclosures are all without any hole for a cable gland or a switch.

6.3.1.3.1 CAH_Y-CHCc7000

Useable space for CAH_CombiCard 7000: Inject + 20eUs + 17 eUs + 23 eUs

6.3.1.4 Alubos

The Alubos enclosures are all without any hole for a cable gland or a switch.

6.3.1.4.1 CAH_Y-CHAbo1600

Useable space for CAH_Y-AluBos 1600: Inject + 15eUs + 12 eUs

6.3.1.5 Euromas

The EuroMas enclosures are all without any hole for a cable gland or a switch.

6.3.1.5.1 CAH_Y-CHEmT250

Useable space for CAH_Y-CHT250: to be defined

6.3.1.5.2 CAH_Y-CHEmT255

Useable space for CAH_Y-CHT255: to be defined

6.3.2 Top-Hat Rail

Using carrier enclosures that can be fixed on a top-hat rail.

CAH_RCa11, CAH_RCa22, CAH_RCa45 each consist of a package of five pieces.
CAH_RCaEnd, CAH_RCaFix each consist of a package of two pieces.

6.3.2.1 Spacer

CAH_Spacer30, CAH_Spacer40, CAH_Spacer50 are boards without any electrical function, they only prevent modules to slide, vibrate inside the rail enclosures from left to right and back.
Each package has 25 pieces.

6.4 Adapters, Connectors

These Adapters are used to connect different emBRICK rows. These Connectors are used to connect different other systems through the enclosure or to connect special third party devices to an emBRICK –Modul.

6.4.1 **Adapter**

6.4.1.1 CAE_X-ExpM10_01 / CAE_X-ExpF10_01

.. adapter to 10 pol boxed connector

Modul ID		
Order No.	**CAE_X-Exp#10_01**	
Terminal	**Boxed connector 10 pol**	
Size	**M: 1 eU** (11mm x 72mm) **F: 2 eU** (22mm x 72mm)	
Variants	**M: male connector to brickBUS** **F: female connector to brickBUS**	

6.4.1.1.1 Brief Description

With this adapter you can connect the bus to another row of *emBRICK®*-modules over a 10pol wire. The male will be used on the right side of the modules and the female on the left side. The modules can be initialized from left and right. The connector to wire is lockable. To use this you also need one of these wires 6.4.1.6 CAE_X-10Wire

6.4.1.2 CAE_X-ExpFlatM10_01 / CAE_X-ExpFlatF10_01

.. adapter to the next emBRICK Modul in the next row

Modul ID		
Order No.	**CAE_X-ExpFlat#10_01**	
Variants	**M: male connector to brickBUS** **F: female connector to brickBUS**	

6.4.1.2.1 Brief Description

With this adapter you can connect the bus to another row of *emBRICK®*-modules. This is normally used in enclosures where space is limited. The next row is placed with 1mm distance between the PCBs. The male will be used on the right side of the modules and the female on the left side. The modules can be initialized from left and right.

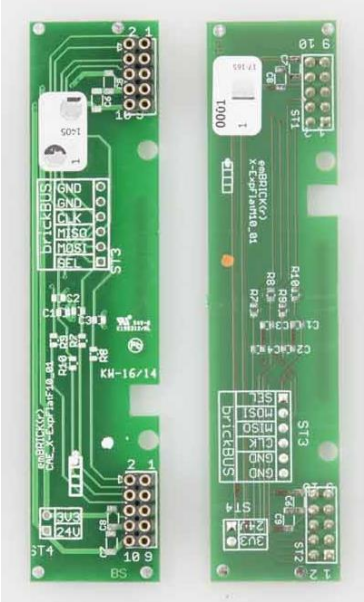

6.4.1.3 CAE_X-ExpMrgFlatM10

.. adapter to the next emBRICK Modul in the next row

Modul ID		
Order No.	**CAE_X-ExpMrgFlatM10**	
Variants	**M: male connector to brickBUS**	

6.4.1.3.1 Brief Description

With this adapter you can connect the local busmaster to another row of *emBRICK®*-modules mounted on a board of the *local-master*. It compensate the height difference between the master board and the module board.

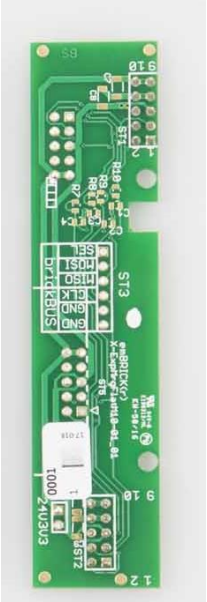

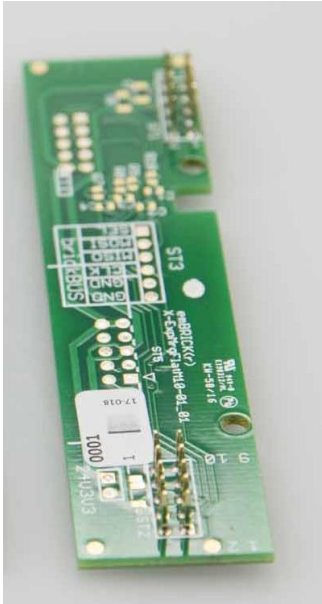

6.4.1.4 CAE_X-TermM_#

prospective

6.4.1.5 CAE_X-TermF_#

prospective

6.4.1.6 CAE_X-10Wire

.. 10pol wire

Modul ID		
Order No.	**see below**	
Clamp Type	**Boxed connector 10 pol**	
Size		
Variants		

This is a 10pol wire with different dimensions and usage.

So all with the subfix “-no3V3” are the 3V3 connection is opened, this will be used with the CBB_CPU-uniMind-1_#, then this board has his own 3V3 generation. The number after “Wire” is the length of the cable in cm.

Order No.:

CAE_X-10Wire20

CAE_X-10Wire20-no3V3

CAE_X-10Wire30

CAE_X-10Wire30-no3V3

CAE_X-10Wire54

CAE_X-10Wire54-no3V3

These products are usable with the CAE_X-ExpM10_01 and the CAE_X-ExpF10_01.

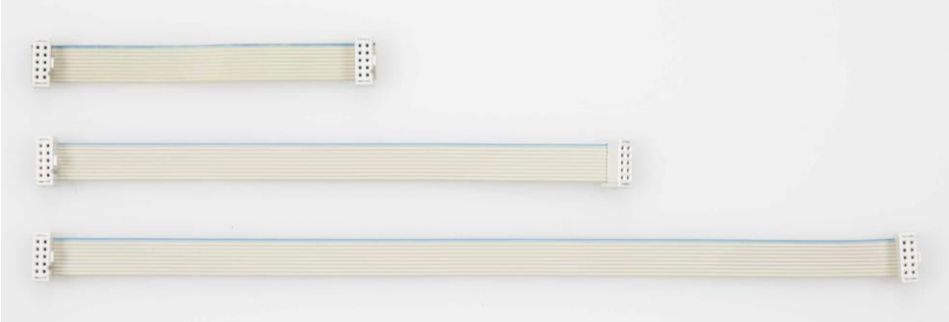

6.4.1.7 CAE_X-RepF10_#

prospective

6.4.1.8 CAE_X-RepIsoL8_#

prospective

6.4.1.9 CAE_X-AdaBox-FBFBM10-Isoinject24-RB-01

.. Adaptor between rail-box and rail-flat housing systems mounted in a rail-box (1M XTS).

Modul ID		
Order No.	**CAE_X-AdaBox-FBFBM10-Isoinject24-RB-01**	
Clamp Type		
Size	**70x90x18mm**	
Variants	**-**	

6.4.1.9.1 Brief Description

This adaptor is an adaption unit for our local bus and is mounted in a DIN rail-box housing (1M XTS format). With this box you can adapt the local bus from

- Rail-box (left) to rail-flat (right)
- Rail-flat (left) to rail-box (right)
- From upper 10pol boxed pin header with latching to rail-box or to rail-flat

By the third version the signals from the upper boxed pin header to the left and right bus connectors are isolated and you can only adapt from the upper connector to either the left side or to the right side.

This adaptor has also an internal voltage regulator (for 3,3V) to power up the brickBUS and needs an external power supply with 24V DC.

6.4.1.9.2 Mounting example (rail-box to rail-flat)

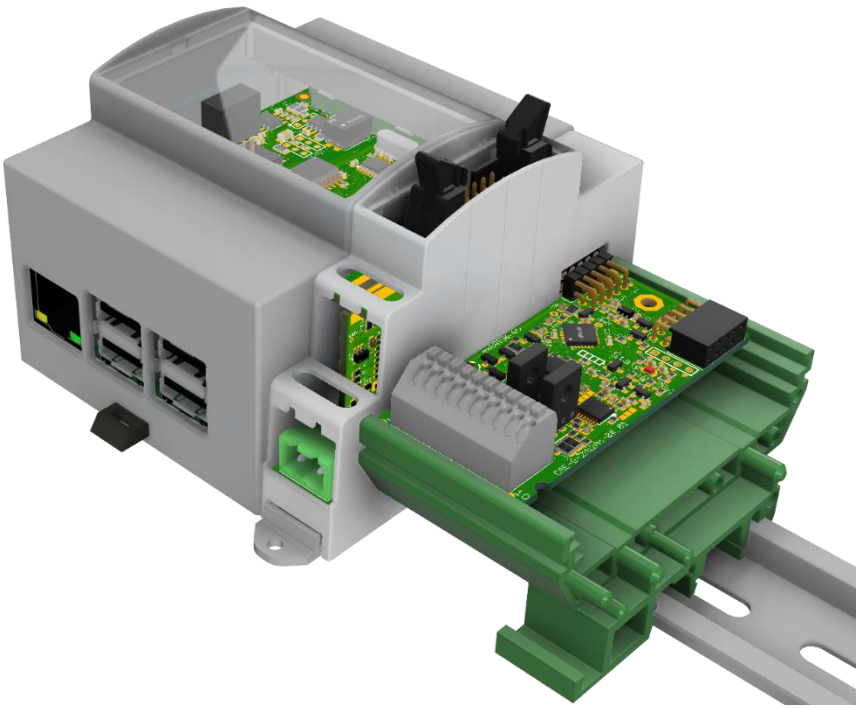

6.4.1.9.3 Connection of the 2pin connector

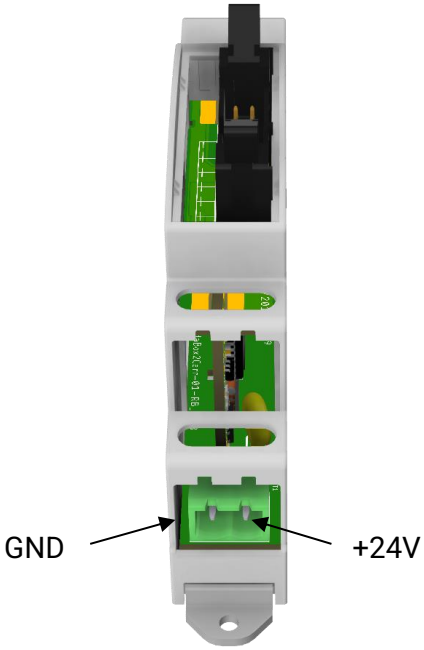

-11-RB Front

6.4.1.9.4 Technical Data

Supply:
Voltage input ..... 24V dc
Max. Current 1A

Mechanics:
Terminals 24V ..... 1 x 2, male connector PTR 508
Connection..... usable with one litz wire from 0.2 – 2,5 mm²
Dimensions ..... 70 x 90 x 18 mm

6.4.1.10 CAE_X-AdaVertB2F-01

.. adaptor to connect rail-box and rail-flat systems

Modul ID		
Order No.	**CAE_X-AdaVertB2F-01**	
Clamp Type		
Size	**35x77,5mm**	
Variants	**-**	

6.4.1.10.1 Brief Description

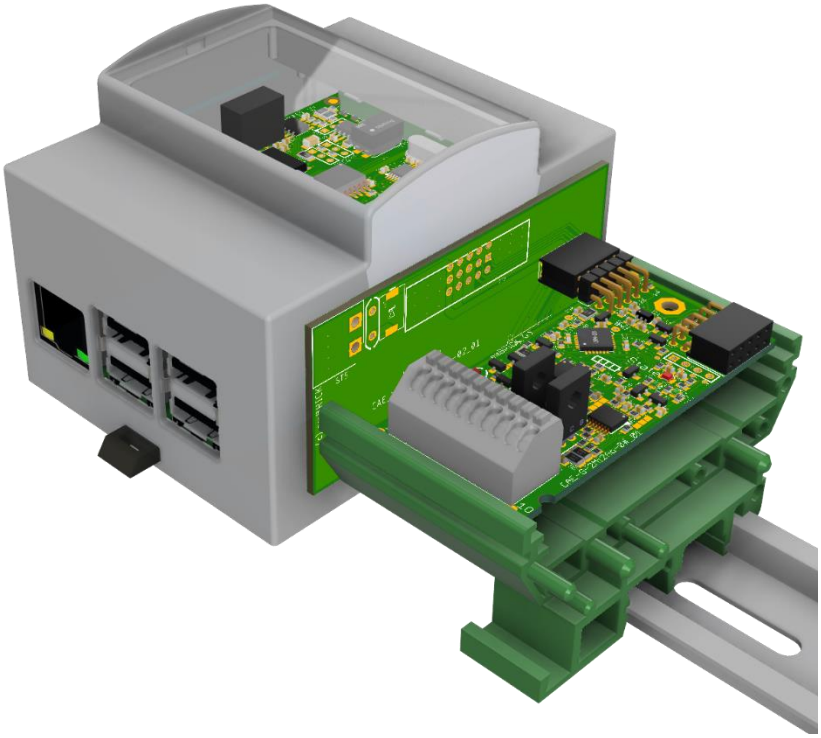

This adaptor is an adaption unit for our local brickBUS to connect rail-box systems (left) to rail-flat systems (right). This unit has no housing and will be mounted vertical between the rail-box and rail-flat systems.

6.4.1.11 CAE_X-AdaVertF2B-01

.. adaptor to connect rail-flat and rail-box systems

Modul ID		
Order No.	**CAE_X-AdaVertF2B-01**	
Clamp Type		
Size	**35x77,5mm**	
Variants	**-**	

6.4.1.11.1 Brief Description

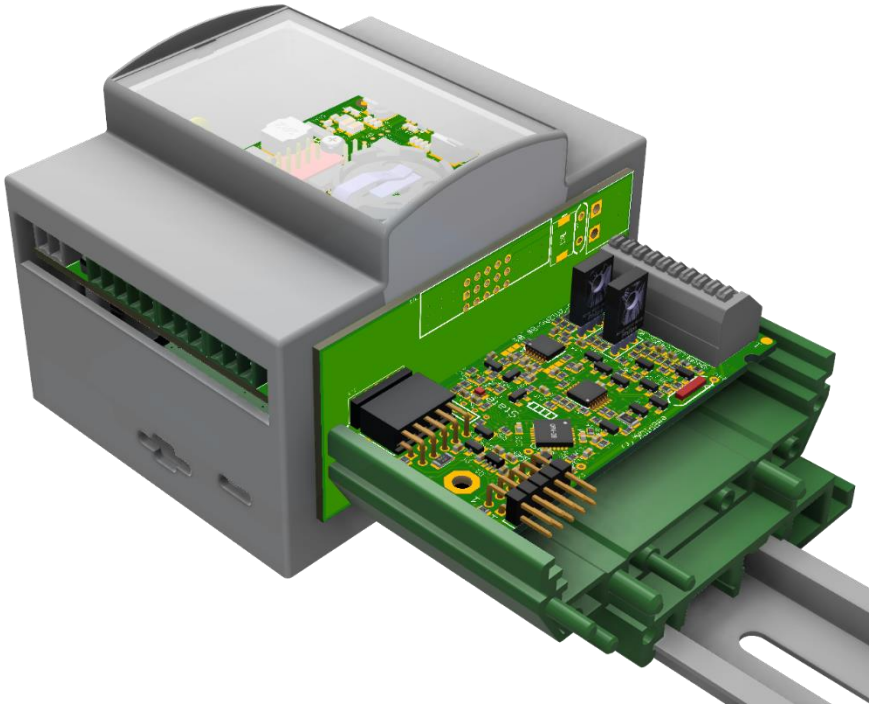

This adaptor is an adaption unit for our local brickBUS to connect rail-flat systems (left) to rail-box systems (right). This unit has no housing and will be mounted vertical between the rail-box and rail-flat systems.

6.4.1.12 CAE_X-AdaBoxInject24-RB-01

.. adaptor to connect rail-box systems via 10pol wire with external CPU-boards and power the brickBUS with 24V / 3,3V, mounted in a rail-box housing (2M XTS)

Modul ID		
Order No.	**CAE_X-AdaBoxInject24-RB-01**	
Clamp Type		
Size	**62x90x36mm**	
Variants	**-**	

6.4.1.12.1 Brief Description

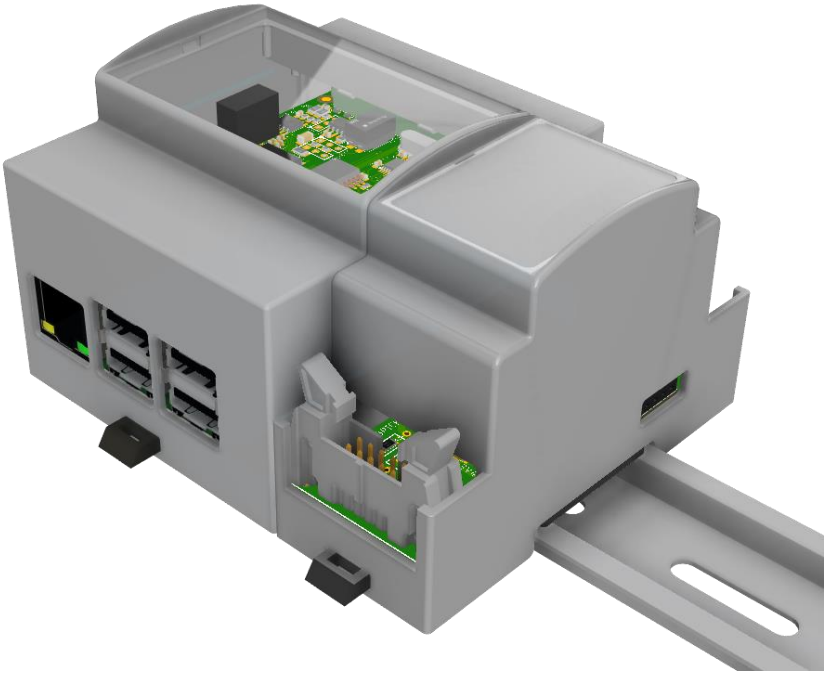

This adapter is an adaption unit for our local brickBUS to connect rail-box systems (on left or right side of the adaptor) and external running systems like a cpu-board with an 10pol wire.

This box needs an external power supply (24V DC) to power the local brickBUS with 24V and 3,3V (uses an integrated power regulator with max 1A).

6.4.1.12.2 Connection of the 4 pin male connector

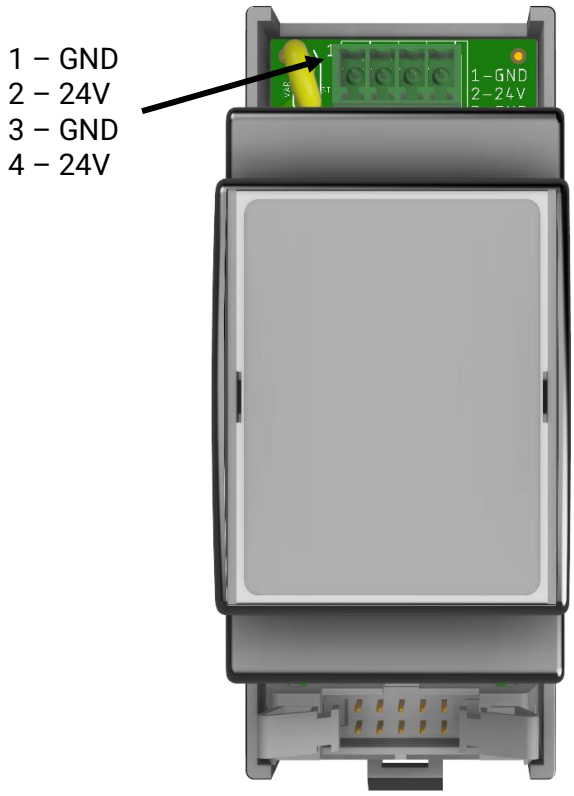

6.4.1.12.3 Terminal Assingment

Circuit Example	Ident.	Term	Function	Usage	internal simplified diagram
	(cage clamp)				
	GND	**1**	Supply Input		
	24V	**2**			
	GND	**3**			
	24V	**4**			

6.4.1.12.4 Technical Data for AdaBox2Carr-30-RB

Supply:
Voltage input ..... 24V dc
Max. Current 24V brickBUS 1,1A
Max. Current 3,3V brickBUS 1A

Mechanics:
Terminals 24V ..... 1 x 4, male connector PTR 1550 with plug
Connection..... usable with one litz wire from 0.2 – 2,5 mm²
Dimensions ..... 62x90x36 mm

6.4.1.13 CAE_X-AdaBox-RB-01

.. adaptor to connect rail-box systems via 10pol wire with external CPU-boards and power the brickBUS, mounted in a rail-box housing (2M XTS)

Modul ID		
Order No.	**CAE_X-AdaBox-RB-01**	
Clamp Type		
Size	**62x90x36mm**	
Variants	**-**	

6.4.1.13.1 Brief Description

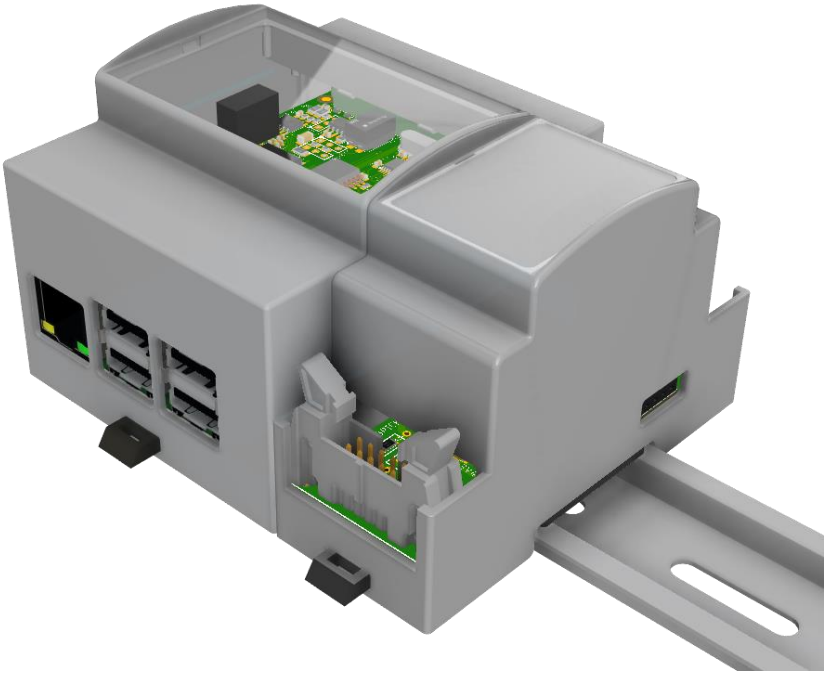

This adapter is an adaption unit for our local brickBUS to connect rail-box systems (on left or right side of the adaptor) and external running systems like a cpu-board with an 10pol wire.

6.4.1.14 CAE_X-Adainject24-01

Power Supply and adaptor for emBRICK modules in rail-flat housings

Modul ID		
Order No.	**CAE_X-Adainject24-01**	
Terminals	**-**	
Size	**22x72x36 mm**	
Variants	**-10: with all**	

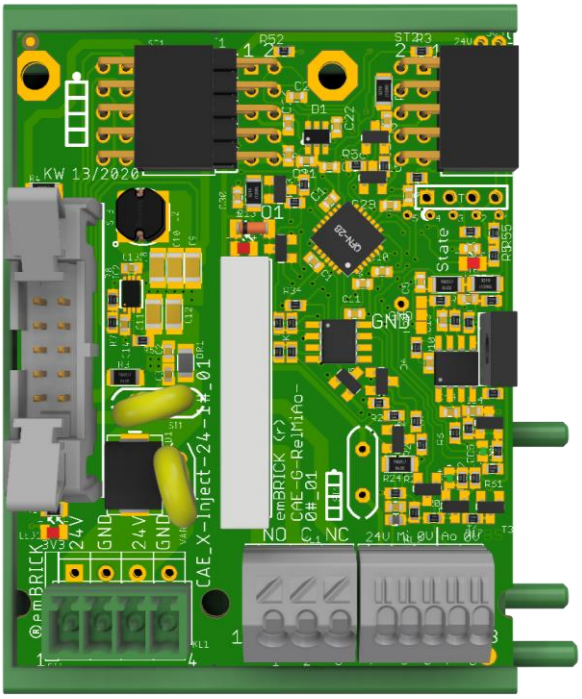

6.4.1.14.1 Brief Description

The module Adainject24-01 is a power supply unit for emBRICK modules mounted in rail-flat housings. It provides 24V and 3,3V to the emBRICK modules. This module needs an external power supply with 24V DC. You can also connect an external brickBUS system like an cpu-board with a 10pol wire to this board.

6.4.1.14.2 Connectors and Indication-Elements

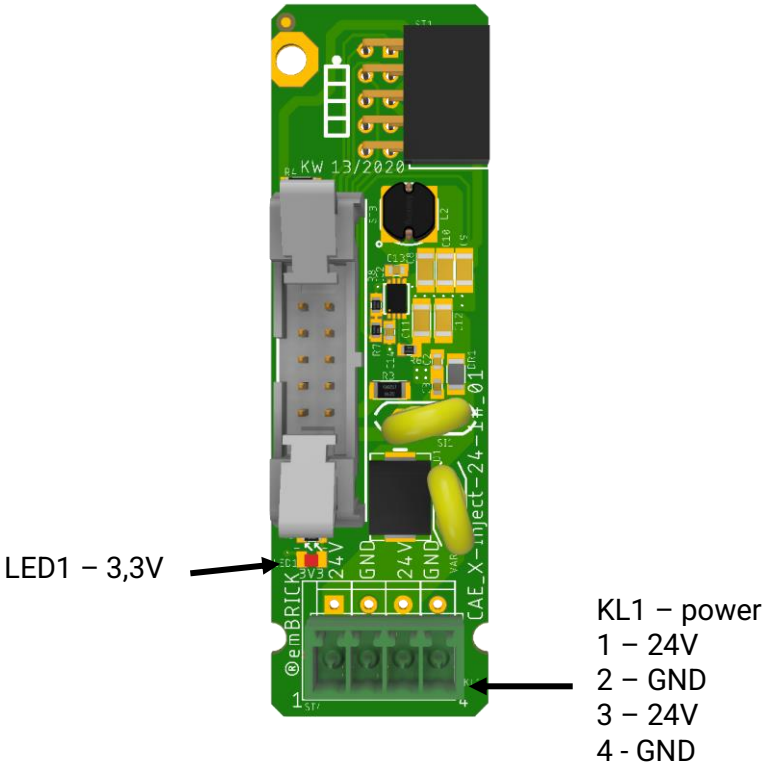

6.4.1.14.3 Terminal Assingment

Circuit Example	Ident.	Term	Function	Usage	internal simplified diagram
	(cage clamp)				
	24V	**1**	Supply Input		
	GND	**2**			
	24V	**3**			
	GND	**4**			

6.4.1.14.4 Technical Data

Supply:
Voltage input ..... 24V dc
Max. Current 24V..... 1,4A dc
Max. Current 3,3V..... 1A dc

General:
Output voltage 24V ..... 24V dc ±10%
Output voltage 3,3V..... 3,45V dc ±5%

Mechanics:
Terminals ..... 1 x 4, male connector PTR1550 and plug
Connection..... usable with one litz wire from 0.5 – 1.5 mm²
Dimensions ..... 22 x 72 x 26 mm

6.4.2 **Connectors**

6.4.2.1 CAS_Sw16-##

2 pol switch green
up to 16A

Modul ID		
Order No.	**CAS_Sw16-##**	
Terminal	**push-in** (for ≤ 0.5mm²)	
Size	**6 eU** (66mm x 72mm)	
Variants 0# =	**01:** 50 cm wire **02:** 21 cm wire	

6.4.2.2 CAC_X-LAN-##

Modul ID		
Order No.	**CAC_X-LAN-##**	
Terminals	**LAN**	
Variants ## =	**fc: female connector** **mc: male connector**	

6.4.2.2.1 Brief Description

With this connectors the Ethernet connection port can be placed on the housing. The connector is waterproof up to IP65.

6.4.2.2.2 Pictures

Female connector open

connector connected

Connector single open

connector closed

6.4.2.3 CAC_X-USB-##

Modul ID		
Order No.	**CAC_X-USB-##**	
Terminals	**USB**	
Variants ## =	**fc: female connector** **mc: male connector**	

Description similar to CAC_X-LAN-##.

6.4.2.4 CAE_X-Clack9-01

Modul ID		
Order No.	**CAE_X-Clack9-01**	
Terminals	**push-in** (for ≤ 0.5mm²)	
Variants ## =		

6.4.2.4.1 Brief Description

Adaption and connection board for Clack softerner valve.

6.4.2.4.2 Connectors and Indication-/Operation-Elements

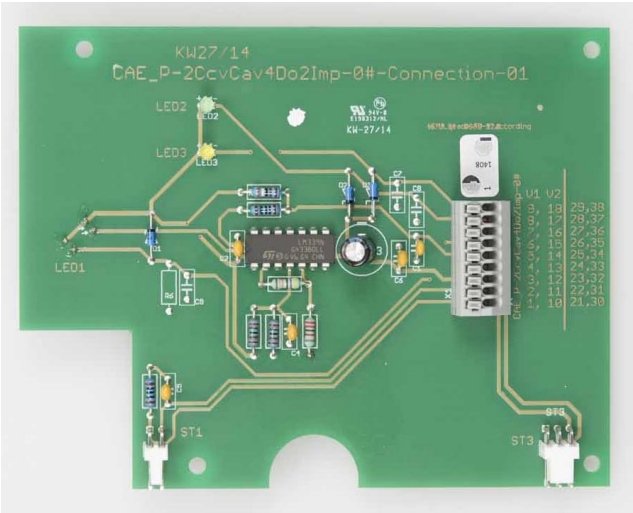

6.4.3 LCD-Interfaces

6.4.3.1 CAE_X-HMI-01

Modul ID		
Order No.	**CAE_X-HMI-01**	
Terminals		
Variants ## =		

6.4.3.1.1 Brief Description

It is a small adapter PCB, which is able to connect a LCD from a special display family directly to the Master. At the moment it is useable for Z-LCSUL-Beagle-01.

6.5 Power Supplies

6.5.1 X-Inject230-20SM-01

20VA Supply power
for emBRICK modules
Main switch (optional)

Modul ID		
Order No.	**CAE_X-Inject230-20SM-01**	
Terminals	**push-in** (for ≤ 1.5mm²)	
Size	**2 rows, upper 80mm, lower 35mm** (hight=145mm)	
Variants	**-**	

6.5.1.1 Brief Description

The module X-Inject230-20SM-01 is a switched power supply, it provides 24V and 3,3V to the emBRICK modules. The 24V can be used for small actors over a push-in connection. An external actuator can be supplied with 230V and special emBRICK modules with 230V.

Optional a main switch can be connected.

6.5.1.2 Connectors and Indication-Elements

6.5.1.3 Terminal Assingment

Circuit Example	Ident.	Term	Function	Usage	internal simplified diagram
	(cage clamp)				
	PE	**1**	Supply Input	protective earth	
	N	**2**		Neutral wire	
	L	**3**		Phase wire	
	PE	**4**	Supply Output 230V ac	protective earth	
	N	**5**		Neutral wire	
	L	**6**		Phase wire	
	(AMP connector)				
	PE	**7**		protective earth	
	(cage clamp)				
	24V	**8**	Supply Output 24V dc	switching input	
	GND	**9**		switching input	
	(MiniFit)				
	1		Switch connector	Neutral wire in	
	2			Neutral wire	
	3			Phase wire in	
	4			Phase wire	
	(internal 230V AC supply)				
	X	**13**	IO-Supply 230V ac	protective earth	
	Y	**14**		Neutral wire	
	Z	**15**		Phase wire	

6.5.1.4 Technical Data

Supply:
Voltage input range..... 180 - 250V ac
Output power 20VA
[alternative
Voltage input range..... 80V – 250V ac
Output power ..... 7VA]

General:
Output voltage 24V ..... 24V dc ±10%
Output voltage 3,3V..... 3,45V dc ±5%
Fuse1 ..... 0,2 AT
Fuse2 ..... 5 AT

Mechanics:
Terminals ..... 2 x 12, cage clamp Wago250
Connection..... usable with one litz wire from 0.5 – 1.5 mm²
Dimensions ..... 80 x 150 x 40 mm
Weight ..... approx. 110g

6.5.2 X-Inject230-30SM-01

30VA Supply power
for emBRICK modules
Main switch (optional)

Modul ID		
Order No.	**CAE_X-Inject230-30SM-01**	
Terminals	**push-in** (for ≤ 1.5mm²)	
Size	**2 rows, upper 80mm,** **lower 30mm** (hight=145mm)	
Variants	**-**	

6.5.2.1 Brief Description

The module X-Inject230-30SM-01 is a switched mode power supply. It provides 24V and 3,3V with an total max. power of 30W to the brickBUS and its modules. The 24V can be used for small actors over a push-in connection. An external actuator can be supplied with 230V and special emBRICK modules with 230V.

Optional a main switch can be connected.

6.5.2.2 Connectors and Indication-Elements

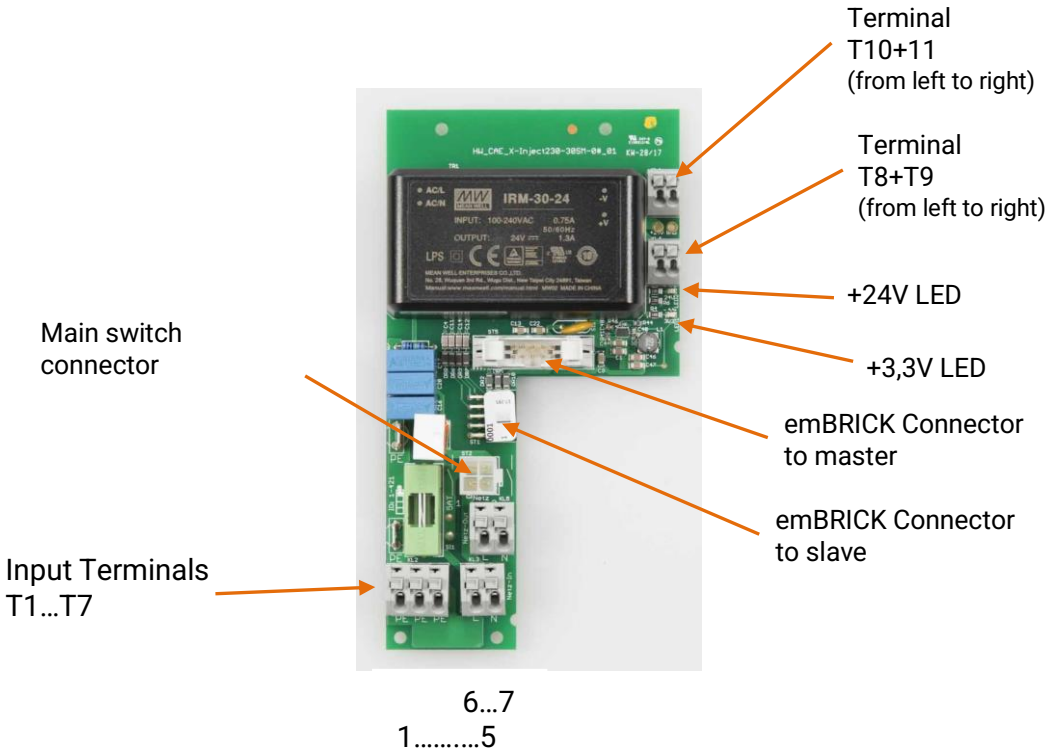

6.5.2.3 Terminal Assingment

Circuit Example	Ident.	Term	Function	Usage	internal simplified diagram
	(cage clamp)				
	PE	**1**	protective earth		
	PE	**2**			
	PE	**3**			
	L	**4**	Supply Input 230V ac	Phase wire	
	N	**5**		Neutral wire	
	L	**6**	Supply Output 230V ac	Phase wire	
	N	**7**		Neutral wire	
	(AMP connector)				
	PE			protective earth	
	PE				
	(cage clamp)				
	24V	**8**	Supply Output 24V dc	switching input	
	GND	**9**		switching input	
	24V	**10**	Supply Output 24V dc		
	GND	**11**			
	(MiniFit)				
	1		Switch connector	Neutral wire in	
	2			Neutral wire	
	3			Phase wire in	
	4			Phase wire	
	(internal 230V AC supply)				
	X		IO-Supply 230V ac	Phase wire	
	Y			Neutral wire	

6.5.2.4 Technical Data

Supply:
Voltage input range..... 85 … 264V ac
Frequency range..... 47 … 440Hz
Output power 30W

General:
Output voltage 24V ..... 24V dc ±10%
Output voltage 3,3V..... 3,45V dc ±5%
Fuse1 ..... 5 AT (for external consumptors)
Working Temp ..... -30 … +50°C (up to +65°C with power derating)

Mechanics:
Terminals 230V ..... 2 x 2 + 3 x 2, cage clamp Wago250, 5mm
Connection..... usable with one litz wire from 0.5 – 2.5 mm²
Terminals 24V ..... 2 x 2, cage clamp Wago250, 3.5mm
Connection..... usable with one litz wire from 0.2 – 1.5 mm²
Dimensions ..... 80 x 145 x 40 mm
Weight ..... approx. 110g

6.5.3 X-Inject230-60SM-01

6.6 Actor Power Supplies

These components are used to inject and distribute middle and high range power to actors up to 10 kW and more.

6.6.1 CAS_Pow3p25A-B400-##

6.6.1.1 CAS_3p25A-B400-01

6.6.2 CAS_Sock1p16A-IP65-##

6.7 Power Control

6.7.1 CAP_Drive3p25A-##

6.7.1.1 CAP_Drive3p25A-01

6.7.1.2 CAP_Drive3p25A-02

6.8 Sensors

6.9 Display

6.9.1 CAD_Edt-70C-01

Modul ID		
Order No.	**CAD_Edt-70C-01**	
Terminals		
Variants ## =		

6.9.1.1 Brief Description

This is a 7” display with 800*480 dots.
This display includes a foil cable with a length of 120mm.

6.9.2 CAD_EdtBot-70C-01

Modul ID		
Order No.	**CAD_EdtBot-70C-01**	
Terminals		
Variants ## =		

6.9.2.1 Brief Description

This is a 7” display with 800*480 dots it mounted in an housing.
This display includes a foil cable with a length of 120mm.

6.10 Tools

6.10.1 CAE_MountCarrier-01

A tool that simplifies the mounting of spacers into a CarrierBoard.

7. CC Packages

7.1 General Information

Packages are predefined component configurations. They contain a master (partly with integrated HMI/display) and slave components with an enclosure and mounting material. They are partly sector typical but also for common use.

Also the valid starterkits are a constellation of one master and one slave modul with different IOs, digital inputs, digital outputs (relay) and analog inputs and therefore listed in this chapter.

7.2 Controller, compact

7.2.1 CCB_MIND1-####-28#

7.2.1.1 CCB-MIND1-B200-28S

Partlist:

Qu.	Components	Qu.	Components	Qu.	Components
1x	CBB_uniMIND-1-28S	1x	CAE_Y-CHBoc200		
1x	CAE_X-Inject230-20SM-01				
1x	CAH_B200-28				

positions of HMI-elements example of inserted boards

7.2.1.2 CCB-MIND1-B200-28M

Partlist:

Qu.	Components	Qu.	Components	Qu.	Components
1x	CBB_uniMIND-1-28M	1x	CAE_Y-CHBoc200		
1x	CAE_X-Inject230-20SM-01				
1x	CAH_B200-28				

picture: see CCB-MIND1-B200-28S

7.2.1.3 CCB-MIND1-B250-28L

Partlist:

Qu.	Components	Qu.	Components	Qu.	Components
1x	CBB_uniMIND-1-28L	1x	CAE_Y-CHBoc200		
1x	CAE_X-Inject230-20SM-01				
1x	CAH_B200-28				

picture: see CCB-MIND1-B200-28S

7.2.2 **CCB_MIND1-####-35#**

7.2.2.1 CCB-MIND1-B250-35XL

Partlist:

Qu.	Components	Qu.	Components	Qu.	Components
1x	CBB_uniMIND-1-35XL	1x	CAE_Y-CHBoc250		
1x	CAE_X-Inject230-20SM-01				
1x	CAH_B250-35				

Display position not defined till now.

7.2.2.2 CCB-MIND1-B400-35XL

Partlist:

Qu.	Components	Qu.	Components	Qu.	Components
1x	CBB_uniMIND-1-35XL	1x	CAE_Y-CHBoc400		
1x	CAE_X-Inject230-20SM-01				
1x	CAH_B400-35				

Display position not defined till now.

Picture shows CAH_B400-35 true to scale.

7.2.3 **CCB_BRAIN1-####-70R**

7.2.3.1 CCB-BRAIN1-B250-70R

Partlist:

Qu.	Components	Qu.	Components	Qu.	Components
1x	CBB_CPU-uniBrain-1-70R	1x	CAE_Y-CHBoc250		
1x	CAE_X-Inject230-20SM-01				
1x	CAH_B250-70				

Display position not defined till now.

Technical Data:

Box: 404 x 344 x 160mm, hinged cover
Power: depends on internal modul configuration
CPU: ARM9, 400MHz, 128MB-Flash, 64MB-RAM, RTC, 8kB-EEPROM
OS: Embedded Linux
Display: 7", Touch resistive, WVGA (800x480 Pixel), True Color
Interface: 1x Ethernet, 3x USB-Master, RS232, SD-Card, Socket-Modem

Options: analog/digital Modem, GPRS-Modem, RS485 (Modbus), Profibus/-Net, ...

7.2.3.2 CCB-BRAIN1-B400-70R

Partlist:

Qu.	Components	Qu.	Components	Qu.	Components
1x	CBB_CPU-uniBrain-1-70R	1x	CAE_Y-CHBoc400		
1x	CAE_X-Inject230-20SM-01				
1x	CAH_B400-70				

Picture shows CAH_B400-70 true to scale.

7.2.4 **CCC_IMPACT1-B250-35T**

7.3 Starterkits

Modules for training, education but also general purpose usage and global PLC replacement with standard-/norm In-/Outputs.

7.3.1 TES_eB-STK-M1

Cortex M3, Display 128x64, Keys, 2x Relays, 4 Digital in, 2 Analog in

7.3.1.1 Partlist

Qu.	Components	Qu.	Components	Qu.	Components
1x	CBB_CPU-uniMIND-1-28-Stk	1x	P-2Rel4Di2Ai-01	1x	CAE_X-MolexKK-24V
1x	CAE_X-10Wire20			opt.	other emBRICK modules
1x	CAE_X-EXPF10			opt.	Carrier-Boards

Additionally required: 24Vdc/500mA power supply, random wired actors/sensors.

7.3.1.2 First after unboxing

Please connect the CAE_X-MolexKK-24V to the CAN Connector MolexKK on the CBB_CPU_uniMIND-1-28-Stk, aswell as the CAE-X10Wire20 to the brickBUS Connector.

The modules should be in this order: X-EXPF10, P-2Rel4Di2Ai-01.

Attention the contacts on the backside of the PCB are open!

Now you can connect the two wires of the X-MolexKK-24V to a supply of 24V dc.

The display will display a *Neutral-Project* with a clock and a few timers shown. Enter the menue with the CR button. There is an emBRICK List where all detected modules are listed with their ID and versions.

7.3.2 **CouplingBrick Starterkit-1**

... works also as a reference platform for remote master development

7.3.2.1 Partlist

Qu.	Components	Qu.	Components	Qu.	Components
1x	CAE_Z-CouplingBrick-02				
1x	CAE_P-2Rel4Di2Ai-01				
1x	CAE_Y-CHBoc200				

7.3.2.2 mounted

7.3.2.3 software and documentation

A start up software you can download on our homepage here.
More information and documentation are in the Product Catalogue.

7.3.3 **RaspberryBrick Starterkit-1**

... works also as a reference platform for local master development

7.3.3.1 Partlist

Qu.	Components	Qu.	Components	Qu.	Components
1x	CAE_Z-RaspberryBrick-02				
1x	CAE_P-2Rel4Di2Ai-01				
1x	CAE_Y-CHBoc200				

7.3.3.2 mounted

7.3.3.3 software and documentation

You can download a start up software on our homepage here.
More information and documentation are in the Product Catalogue.

7.3.4 **BeagleboneBrick Staterkit-1**

... works also as a reference platform for local master development

7.3.4.1 Partlist

Qu.	Components	Qu.	Components	Qu.	Components
1x	CAE_Z-BeagleboneBrick-02				
1x	CAE_P-2Rel4Di2Ai-01				
1x	CAE_Y-CHBoc200				

7.3.4.2 mounted

7.3.4.3 software and documentation

You can download a start up software on our homepage here.
More information and documentation are in the Product Catalogue.

8. Appendix

8.1 Savety Instructions

8.2 CE Declaration

Intelligent Measure And Control Systems
embedded solutions + module-based hardware + model-based software

IMACS

CE Declaration of conformity

IMACS GmbH Meß- und Steuerungstechnik
Alfred-Nobel-Str. 2
55411 Bingen an Rhein

declares that the product / type

all emBRICK© Master and Slave modules with
a "*" mark in the 3rd column of the "Module ID" line
at the "eB_Products.pdf" manual

compiles with the

EG-Richtlinie EMV 2014/30/EU

EG-Niederspannungsrichtlinie 2014/35/EU

This declaration is valid for all exemplars and lost its validity in case of not coordinated modifications.

Applied standards and regulations: DIN EN 61000-6-2:2006-03
DIN EN 61000-6-3:2011-09

The conformity of the product is guaranteed

Date / Manufacturer: 09.05.2017 D. Foltinek

(information about the manufacturer: Andreas Foltinek, CEO)

FB 7.3 003 Konformitätserklärungen.dot

8.3 RoHS Declaration